VENUS SERIES

CNC PLASMA CUTTER

Techno CNC Systems

VENUS TABLETOP SERIES PLASMA CUTTER

The Venus series CNC Plasma is constructed using rigid materials delivering ultra-smooth plasma cutting results.. The Venus Series CNC Plasma can be equipped with a variety of plasma torch power supplies, each one capable of cutting different material thicknesses. The gantry height is 7-1/2", which provides maximum flexibility to cut sheet goods and larger or taller welded assemblies, if desired. The Venus Plasma provides includes a stainless steel water table which absorbs about 90% of the smoke created when cutting. The Venus plasma comes with a steel base and safety enclosure. The safety enclosure includes a top smoke evacuation port so it can be plumbed into an existing ventilation system if so desired. The machine drive motors are powerful NEMA 34 sized high speed stepper motors, directly coupled to precision ball screws on all three axes. This provides optimum power, speed, and accuracy when cutting thin sheet metal or thicker plate stock. The plasma torch is cradled in an electronic, automatic, torch breakaway module, using a real time CNC torch height control system. The Venus Plasma has a PC based industrial controller with a Windows 10 operating system and uses an Ethernet connection for high-speed communication and uninterrupted processing. The system interface is easy to learn, easy to use, and makes the machine operation simple for instructors and students. No other machine on the market includes all of these features and capabilities.

Views:

Specifications:

- 20 x 30" Process area
- Precision ball screws on all three axes
- Hypertherm Torch
- Brushless micro stepper motors and controls
- Stainless steel water tray with verical grid
- Automatic torch height control
- Linear rails and bearings
- PC based WinCNC Controller
- Electronic torch breakaway

Options:

- Hypertherm Powermax 45, 65, 85, or 105
- Consumables
- Programming Software
- Steel base with wheels
- Full Safety Enclosure
- Spark Skirt

Features:

Water Table

Techno Venus comes standard with Stainless steel water tank with extra high side walls keeping the messy sludge inside the tank with built in drain valve the Venus water table is easy to maintain.

Enclosure

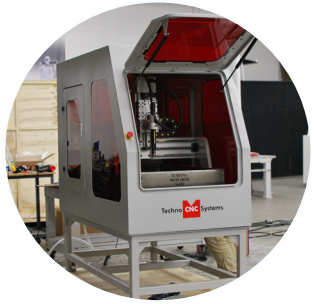

Optional Techno's heavy duty steel base includes hand jack center cross strut for easy maneuverability. Techno's educational safety enclosure feature ergonomic front main door with vertical swing, two side doors, (8) enclosure viewing windows, and 3.0" top dust collection port. Techno's Venus Tabletop plasma with stand and enclosure is designed to roll through a standard 36" door opening making this model machine easy and convenient to move around facility.

Electronic Torch Breakaway

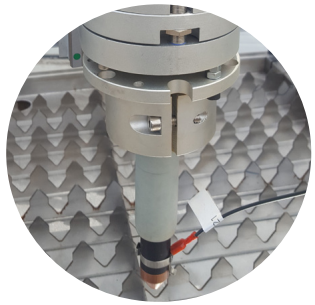

The Venus plasma torch is cradled in an electronic, automatic, torch breakaway module, using a real time CNC torch height control system.

SSA 5000 Controller

This Machine is powered by brushless stepper motors (servo optional), and is controlled via Techno PC based industrial SSA 5000 controller with Windows 10 operating system. System connection is Ethernet for high speed communication resulting in high speed uninterrupted processing.

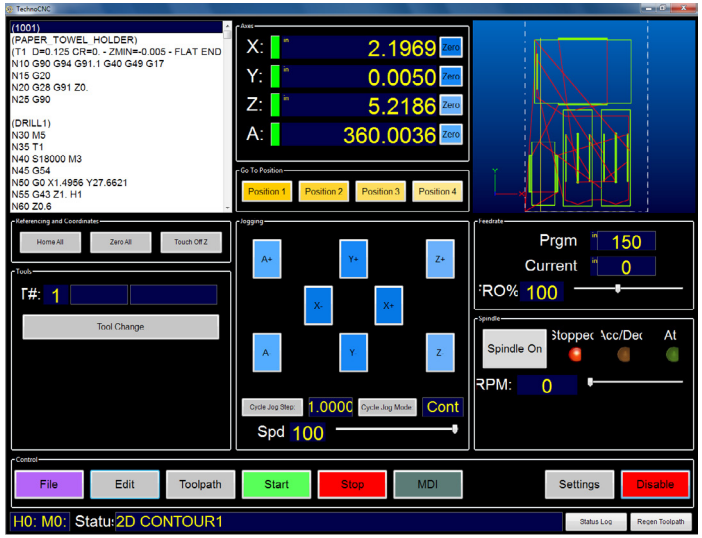

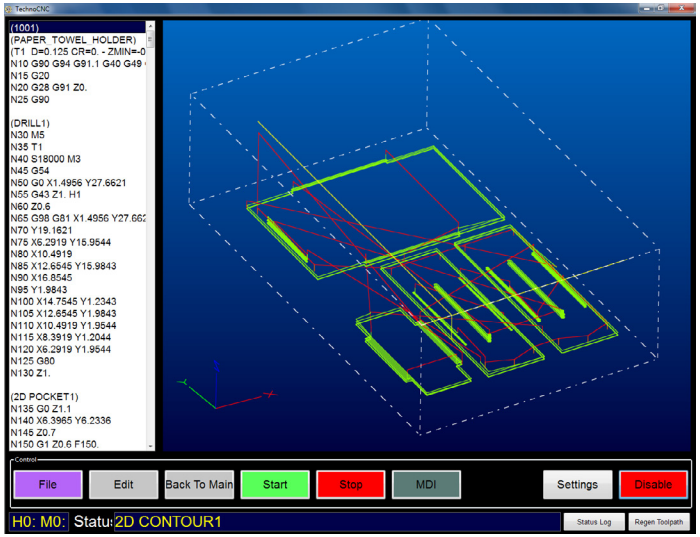

- Easy to learn and use control interface
- Ethernet connection for robust communication in the harshest electrical environments
- High-speed dedicated motion controller processes NC files in real-time for smooth motion and optimal cut quality
- Graphical display of machine position and parts seamlessly links relation between physical environment and control interface
- Programmable Goto Positions for easy loading and unloading of parts, or machine maintenance, and more
- Accepts industry standard G & M codes

See What the Venus Series Plasma Can Do

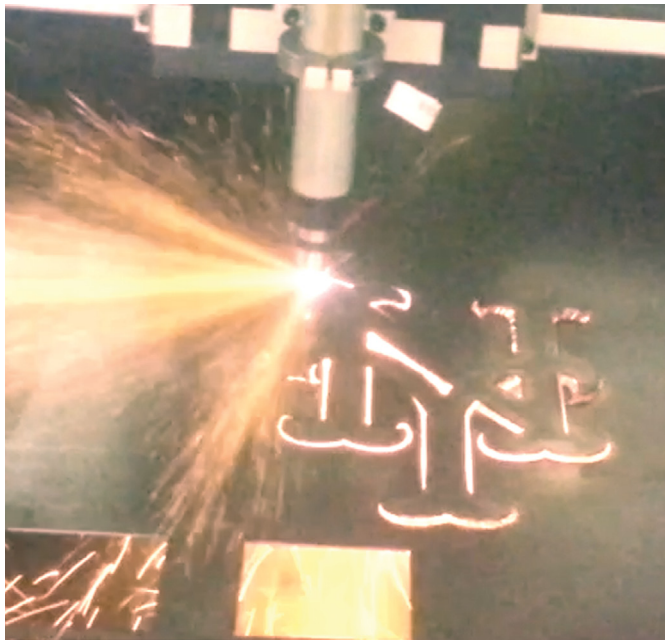

Techno CNC Systems

CNC ROUTERS • CNC PLASMA CUTTERS