HDS Series CNC Router User Manual

WARNING: DO NOT OPERATE THIS MACHINE WITHOUT PROPER TRAINING! Improper or unsafe operation of the machine will result in personal injury and/or damage to the equipment.

This manual will provide unpacking, maintenance, and user guide for running the Techno HDS Series and HDS Plus Series CNC Routers.
It is suggested that the operator keep this manual by the machine. This will provide the most important information pertaining to the operation of this machine.

TABLE OF CONTENTS

I.....General Installation Instructions.

1.1 Forklift guide and unpacking instructions. ..... Page 3
1.2 Safety Instructions. ..... Page 4
1.3 Correct Colleting. ..... Page 5
1.3.5 Toolstand 1.3.6 Spindle Warmup ..... Page 6
1.4 Electrical and Pneumatic connections. ..... Page 7 - 8
1.5 Vacuum Pump connections. ..... Page 9

II.....Machine Start-Up and Screen Functionality.

2.1- Start up Procedure. ..... Page 10 - 12
2.2- Screen Callouts. ..... Page 13 - 25
2.3- File System-Network. ..... Page 26

III... Operating Tutorials

3.1- Jogging the Machine. ..... Page 27 - 28
3.2- Learning Tool lengths. ..... Page 29 - 30
3.3- Saving an Origin | Setting XYZ Zero Position ..... Page 31 - 32
3.4- Preparing a G-Code File. ..... Page 33 - 34
3.5- Running a G-Code File. ..... Page 35 - 36
3.6- Machine Origin,Working Origin, & Offsets ..... Page 37

IV.....Advanced Tutorials

4.1- Using Block to Block Function. ..... Page 38
4.2- Mem Search. 4.3- Return to Profile. ..... Page 39
4.4- Setup Parameters. ..... Page 40 - 42
4.5- Backing up Parameters. ..... Page 43 - 45

V.....Machine Lubrication ..... Page 46

VI....Appendix

6.0- HSD Aggregate Tool Setup. ..... Page 47 - 48
6.1- Service and Maintenance Guide ..... Page 49 - 53
6.2- Fault Finding/Error Messages. ..... Page 54 - 58

Becker Vacuum Pump Manual ..... Page 59 - 63
Becker Vacuum Pump Filter Inspection ..... Page 64 - 66
Becker Vacuum Pump Greasing Process ..... Page 67 - 71
Warranty ..... Page 72

Techno CNC Systems HDS Series Forklift Guide

1. Unpack all items that shipped with your machine. Check the items on your slip to be sure nothing was left out. Notify Techno if you have any missing pieces of your shipment.

2. A toolbox and other accessories, such as vacuum hosing and leveling feet, may be packed under the machine during shipping.

3. Forklift your machine up from the floor and remove the wooden pallet (if it was shipped on a wooden pallet).

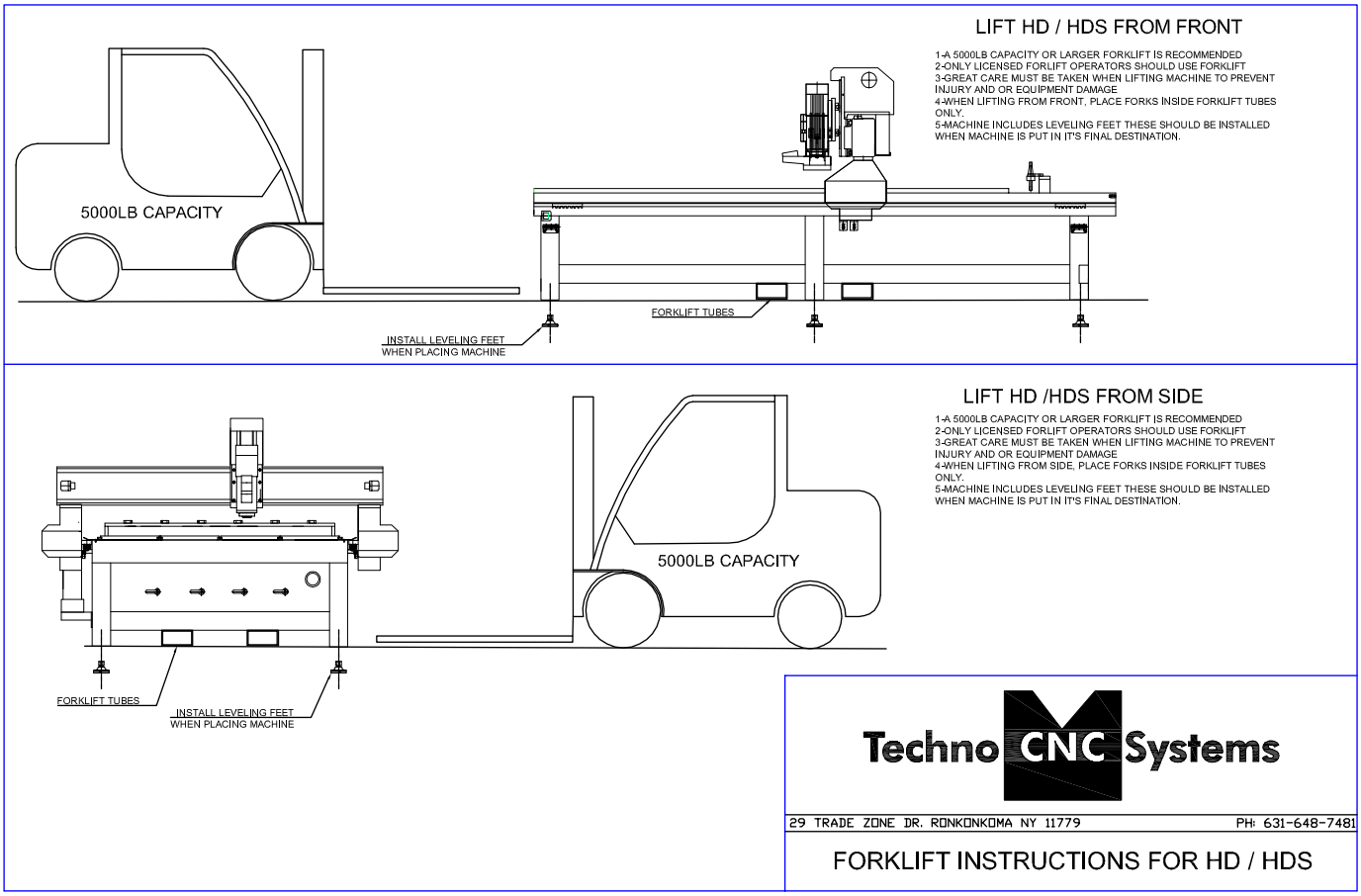

SAFETY WARNING:

DO NOT LIFT MACHINE OR MOVE MACHINE BY THE GANTRY

For safety and to prevent damage to the machine, Lift Machine Using The Frame ONLY
** Some HDS Series CNC Routers do NOT have forklift tubes. **
If so, make sure forklift blades enter through the frame of the machine only. Use blocks when lifting machine to prevent damage to the vacuum table plumbing **

1.2 SAFETY INFORMATION!

Read these instructions thoroughly before operating machine. DO NOT operate machine if you are unfamiliar with these safe operating instructions. DO NOT operate machine without knowing where the emergency stop switch is located.

1. Keep fingers, hands, and all other objects away from machine while power is on.
2. Disconnect power to all system components when not in use, when changing accessories, and before servicing.
3. Do not loosen, remove, or adjust machine parts or cables while power is on.
4. Exercise care with machine controls and around keyboard to avoid unintentional starting.
5. Make sure voltage supplied is appropriate to specifications of components.
6. Machines must be plugged into four-pronged grounded outlets. Do not remove the grounding plug or connect into an ungrounded extension cord.
7. Keep cables and cords away from heat, oil, and sharp edges. Do not overstretch or run them under other objects or over work surfaces.
8. Use proper fixtures and clamps to secure work. Never use hands to secure work.
9. Do not attempt to exceed limits of machine.
10. Do not attempt to use machine for purposes other than what is intended.
11. Use machine only in clean, well-lit areas free from flammable liquids and excessive moisture.
12. Stay alert at all times when operating the machine.
13. Always wear safety goggles.
14. Do not wear jewelry or loose-fitting clothing when operating machine. Long hair should be protected.
15. Always maintain proper balance and footing when working around the machine.
16. Maintain equipment with care. Keep cutting tools clean and sharp. Lubricate and change accessories when necessary. Cables and cords should be inspected regularly. Keep controls clean and dry.
17. Before using, check for damaged parts. An authorized service center should perform all repairs. Only identical or authorized replacement parts should be used.
18. Remove any adjusting keys and wrenches before turning machine on.
19. Do not operate the machine unattended.
20. Follow all safety instructions and processing instructions in the MSDS for the material being processed.
21. Use proper precautions with dust collection systems to prevent sparks and fire hazards.

PREVENT FIRE HAZARDS by using the proper feeds, speeds, and tooling while operating your Techno machine. For example, setting feeds and speeds too low and/or using dull tool bits creates friction at the material. The friction generates heat which can result in a fire that can be drawn through the vacuum table or dust collector without warning. Fire hazard from friction heating caused by dull tools is possible when cutting certain materials, especially composite material such as wood composites, MDF and Particleboard.

© 2015

1.3 Correct Colleting:

Read these instructions thoroughly BEFORE operating machine.

WARNING!

THE SPINDLE WILL BE DAMAGED IF UNBALANCED EQUIPMENT IS USED. AIR SUPPLY MUST BE FILTERED AND DRY.

COLLETING GUIDELINES

WRONG!

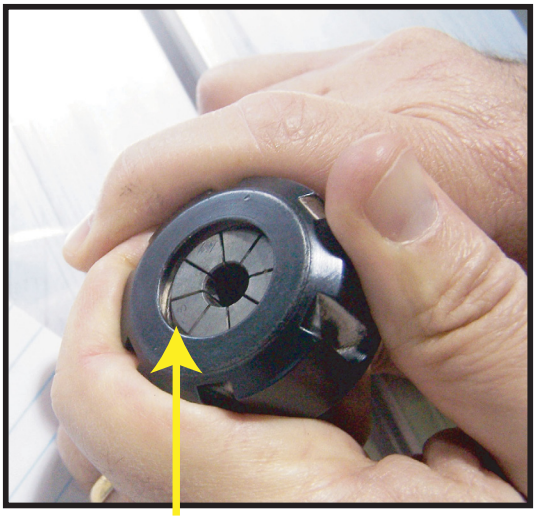

This picture shows an improper assembly. Notice the gap and angle of the collet in relation to the nut. The collet is not flush to the end of the collet nut. Correct this assembly before using.

RIGHT!

The picture above is how your collet nut assembly should look: the end of the collet is flush with the bottom surface of the collet nut. You will hear and feel a "SNAP" as the collet properly goes into the collet nut. Once it is assembled, then "SCREW" the nut onto the threaded spindle end.

DO NOT PUSH THE COLLET INTO THE SPINDLE AT ANY TIME!

Only the proper assembly should be screwed onto the spindle.

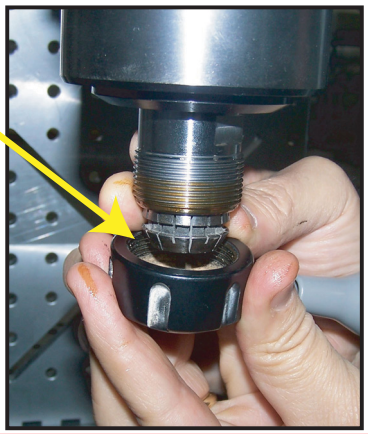

FOR TOOLCHANGE AND FIXED COLLET SPINDLES:

ONLY USE TOOLHOLDERS, COLLET NUTS AND TOOLS THAT ARE BALANCED TO MEET OR EXCEED THE MAX RATED SPEED OF THE SPINDLE.

1.3.5 Tool Stand Diagram - Proper Placement

Read these instructions thoroughly BEFORE operating machine.

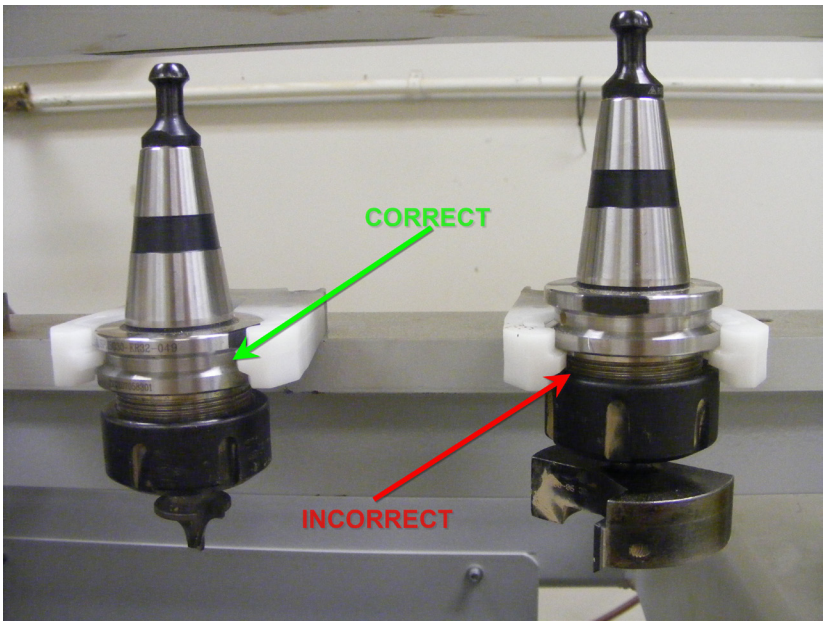

Spindle Warm-up:

Read these instructions thoroughly BEFORE operating machine.

USE AND ADJUSTMENT

PREHEATING

HSD S.p.A. uses high-precision angular contact bearing pairs, pre-loaded and lubricated for life with special grease for high speeds.
When the machine is switched on for the first time every day, allow the electrospindle to perform a brief preheating cycle in order to allow the bearings to gradually attain a uniform operating temperature, and hence to obtain a uniform expansion of the bearing races and the correct preload and rigidity.

The following cycle is recommended, without machining operations:

50	% of the maximum rated speed for 2 minutes.
75	% of the maximum rated speed for 2 minutes.
100	% of the maximum rated speed for 1 minute.

The preheating cycle should also be performed every time that the machine is inoperative long enough for the electrospindle to cool down to room temperature.

Only for HSK versions:
it is forbidden to run the electrospindle without the tool-holder inserted.

While the machine is operating, the spindle can reach high temperatures. Be very careful not to touch it without due precautions.

WARNING: Ensure that all electrical connections are carried out by a qualified electrician. Improper electrical connections can result in damage to the equipment, fire and death.

1.4 Electrical and Pneumatic connections.

The Techno HDS series machine is powered by three phase 220 volts.
The amperage requirements for this machine are 40 amps.

1.4.1
When the machine has been unpacked, it will be necessary to attach the keyboard shelf to the front of the machine.

When the shelf is in place, lead the mouse and keyboard cables through the small hole in the font of the machine. Plug the cables into an available USB connection on the PC.

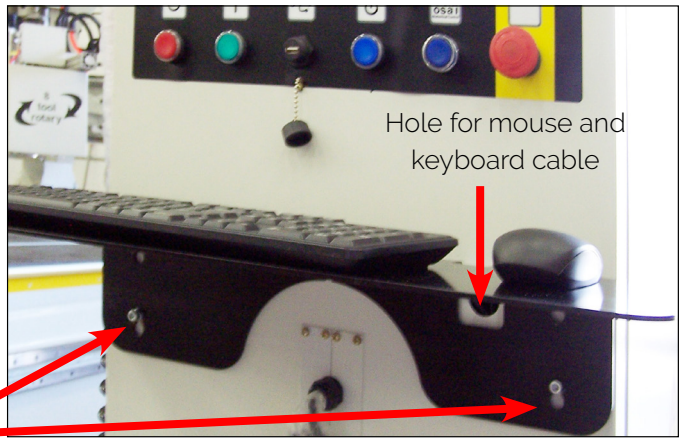

Fig 1.4.1

Fig 1.4.2

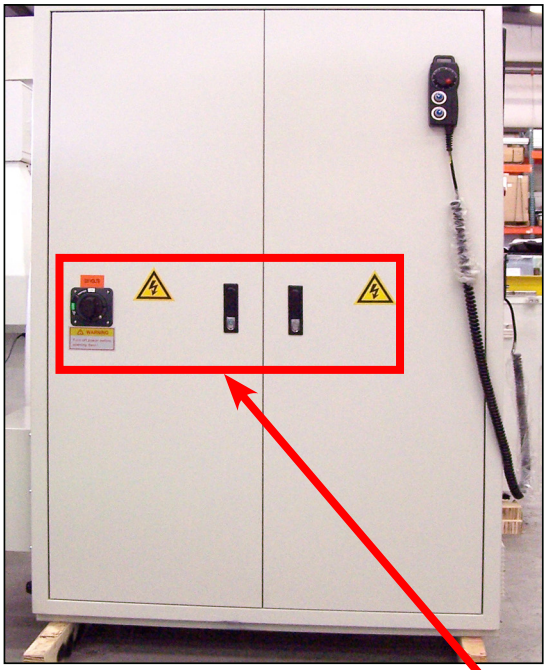

1.4.2
All the electronics for the HDS machine are located in the housing cabinet. Do not open these doors when power is applied to the machine.

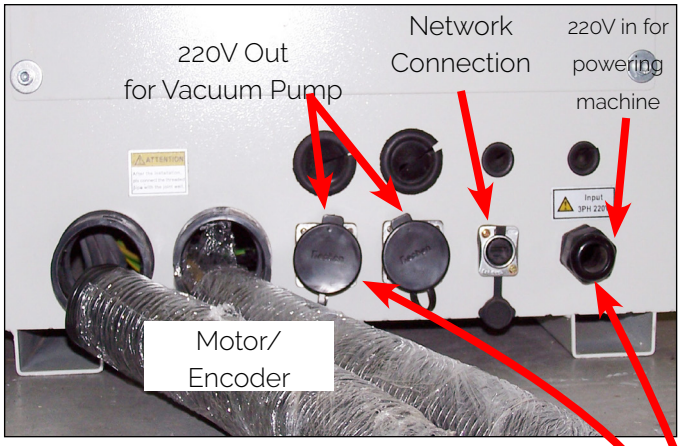

Fig 1.4.3.

1.4.3
There are two rounded connectors on the side of the controller, these connectors provide 220 volts for the vacuum pump starter contactors.

Lead the cable for 3 phase 220 volts that will be used to power machine through the hole on the bottom of the cabinet.

WARNING: Ensure that all electrical connections are carried out by a qualified electrician. Improper electrical connections can result in damage to the equipment, fire and death.

1.4.4

Attach the three phases and the ground to the connections shown in fig 1.4.4a or 1.4.4b

Your machine may come with a terminal block (shown in 1.4.4a) or you machine may come with no terminal block and must be wired to the power switch shown in figure 1.4.4b

Fig 1.4.4a.

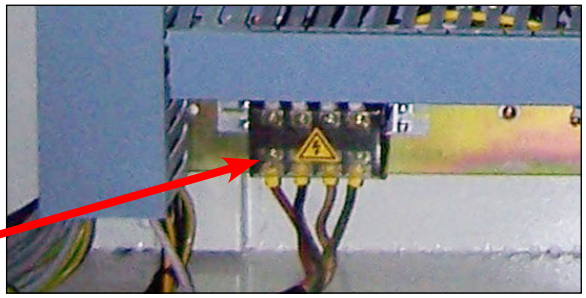

Fig 1.4.4.b

1.4.5

Various components on the machine require air pressure. of 90 psi and needs to be supplied to the machine at all times for it to function correctly.

Attach an air hose to the air input on the back of the machine. See fig 1.4.5.

If your shop hose does not fit the adaptor supplied, the adapter can be removed and a suitable one attached.

Fig 1.4.5

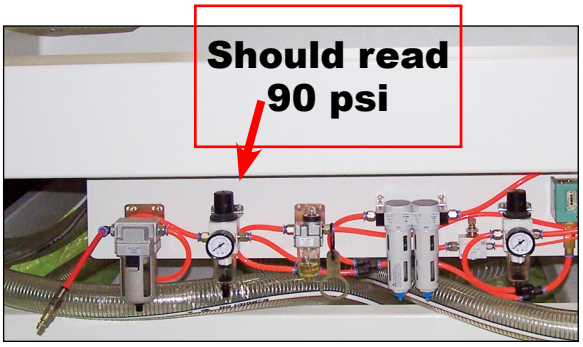

Fig 1.4.6

1.4.6

Remove the four brackets used to stabilize the gantry during shipping using metric allen wrenchs. There may be brackets attached to the X and Z axis, as well.

WARNING: Direction of Rotation is critical.
Briefly start motion and check rotation (arrow on casing).
Exchange phases if rotation is incorrect.
IF YOU RUN THE PUMP/BLOWER CONTINUOUSLY IN THE WRONG DIRECTION, THE VANES WILL BE DAMAGED

1.5 Vacuum Pump connections

You will need to have an electrician connect AC power (220 or 440 VAC) as specified on the unit to the motor starter.

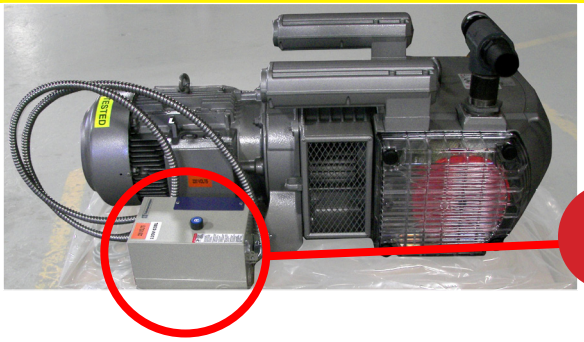

1

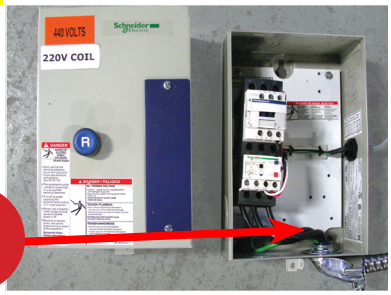

Take the silver connector from the Starter Box and connect it to the female connector on the main electronic unit.

2

Attach the silver connector from the starter box here.

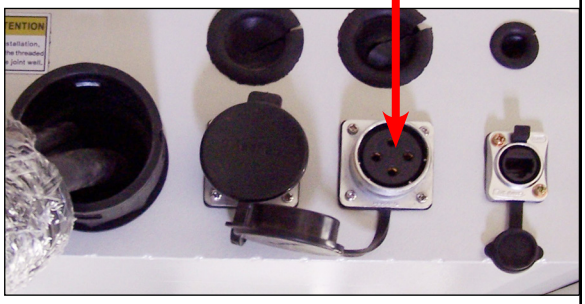

3

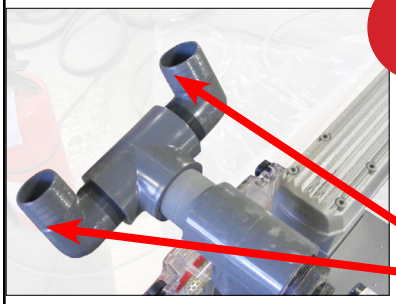

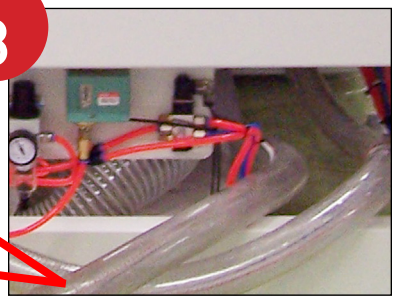

Attach the hoses from the machine to the T-connectors and attach them to the pump.

4

Turn on individual sections of the vacuum table by turning the manifold handles in the front of the machine.

Vacuum on and off functions are controlled by the Osai controller and can only be turned on from the computer screen.

To test the motor, press the reset button on the starter box once all connections are made.

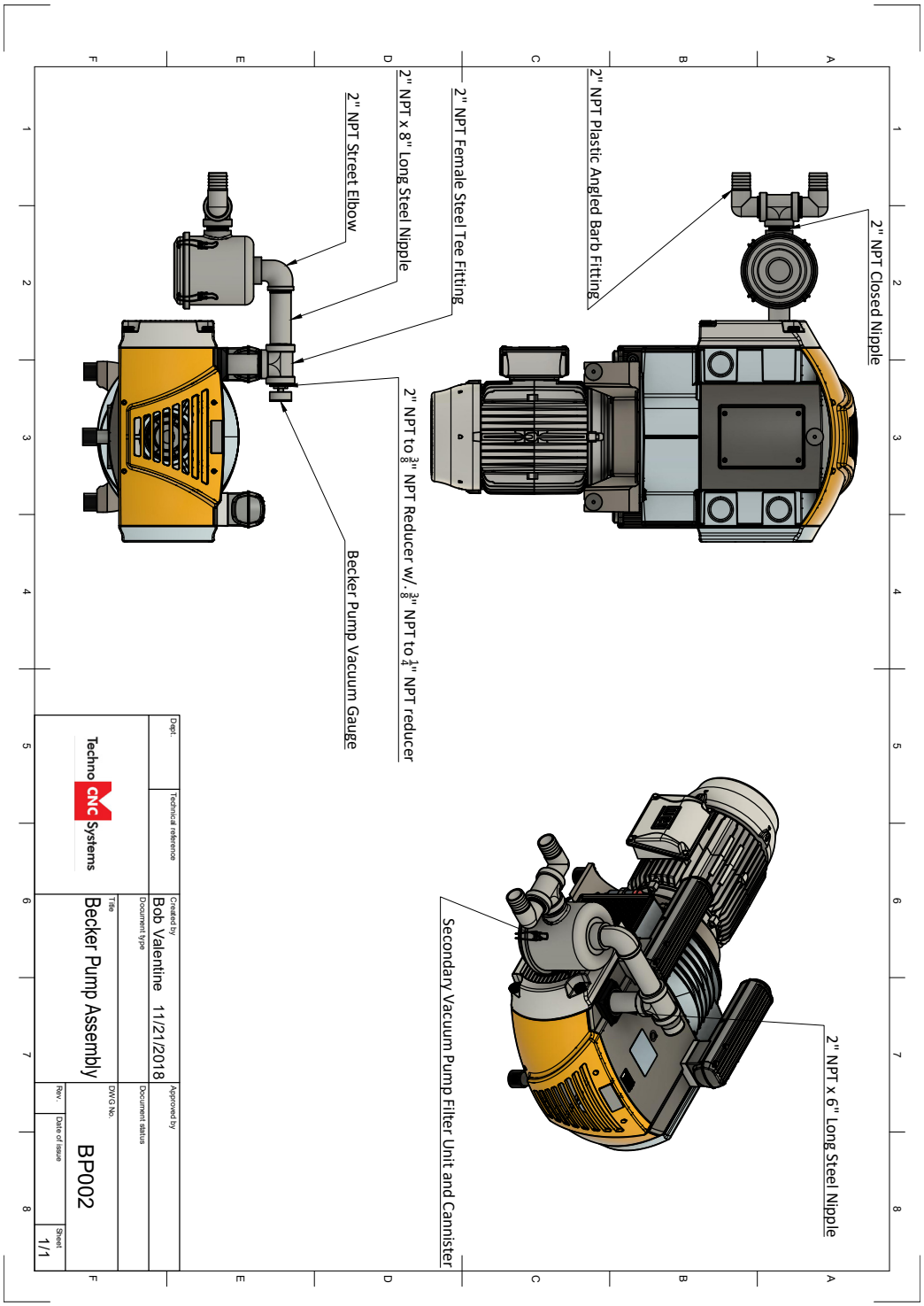
2" NPT Plastic Angled Barb Fitting
2" NPT Closed Nipple
2" NPT Female Steel Tee Fitting
2" NPT x 8" Long Steel Nipple
2" NPT Street Elbow
2" NPT to 3/8" NPT Reducer w/ 3/8" NPT to 1/4" NPT reducer
Becker Pump Vacuum Gauge
2" NPT x 6" Long Steel Nipple
Secondary Vacuum Pump Filter Unit and Cannister
Techno CNC Systems
Dept.
Technical reference
Created by
Bob Valentine 11/21/2018
Approved by
Document type
Document status
Title
Becker Pump Assembly
DWG No.
BP002
Rev.
Date of issue
Sheet
1/1

Make sure wire conduit is properly attached as shown in photos - any exposed wiring could be damaged and cause harm to the machine

Section II: Machine Start-Up | Screen Functionality

2.1- Start up Procedure.

2.1.1 Turn the Main power switch to the ON Position. 220 Volts should have been ran to the machine by an electrician. 220V is going to be attached to the back of the switch (below) or attached to the terminal (below)

*E-Stop may have been pushed in for shipping purposes *

1

Fig 2.1.2

USB Port

Power ON

Power Off

E-stop: Turns off controller, motor and spindle

2.1.2

2 The red light on the front of the machine will light up. This indicates that 220 volts is coming into the machine.

3 Press the Power ON button to start the system.

4 The Power ON light will light up indicating that power has been applied to the controller system and the motors.

5 Press the Computer Power button to start the PC. This may only light temporarily. The PC will start to boot.

2.1.4 Software start up.

Once the PC has started, the Boot Controller software will start automatically. If it does not, double click on the Boot Controller Icon (It looks like a rocket ship) on the desktop. If no text appears in the box, after 30 seconds, check that the light for the controller is on and that the network cable from PC to Osai controller is connected. If no connection occurs, see the Fault Finding section in the Appendix.

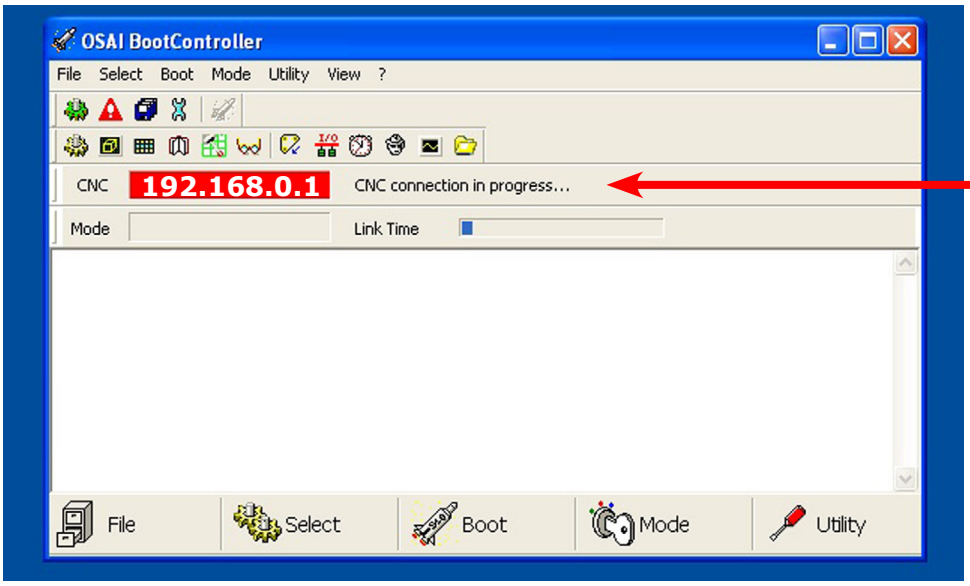

Boot controller loaded and connecting to machine

If the machine is starting from a fresh PC boot, then Normal mode will automatically be selected.

If the Boot Controller does not start after a minute and the message CNC is waiting for a BOOT mode directive appears on the screen, then normal mode needs to be selected.

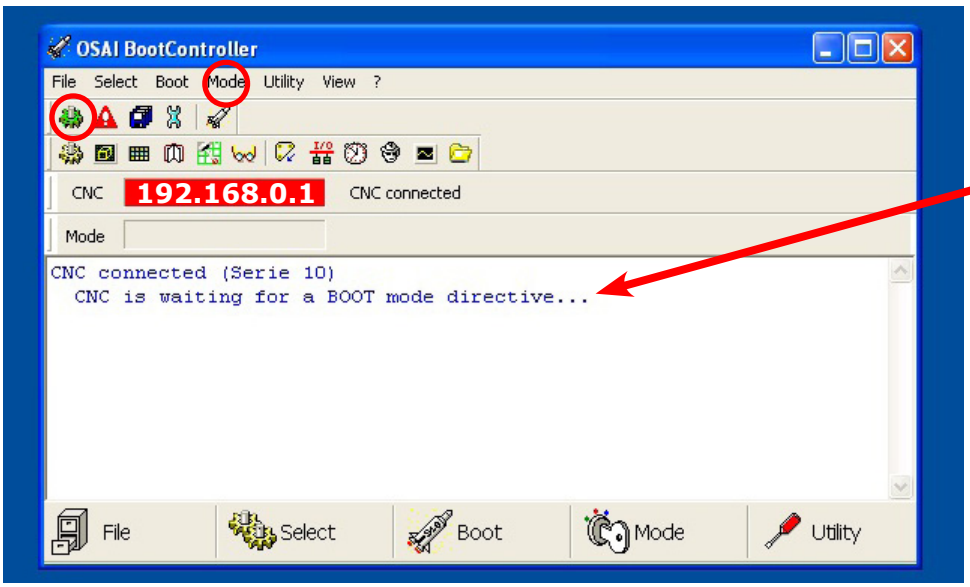

Controller is waiting for a mode.

* Otherwise, it will automatically go into normal mode after a few seconds.

2.1.5 Interface Starts:
The Techno interface screen will now open. There will be a warning message saying Emergency Stop Active.

Click on the E-stop Reset Button to remove this warning.

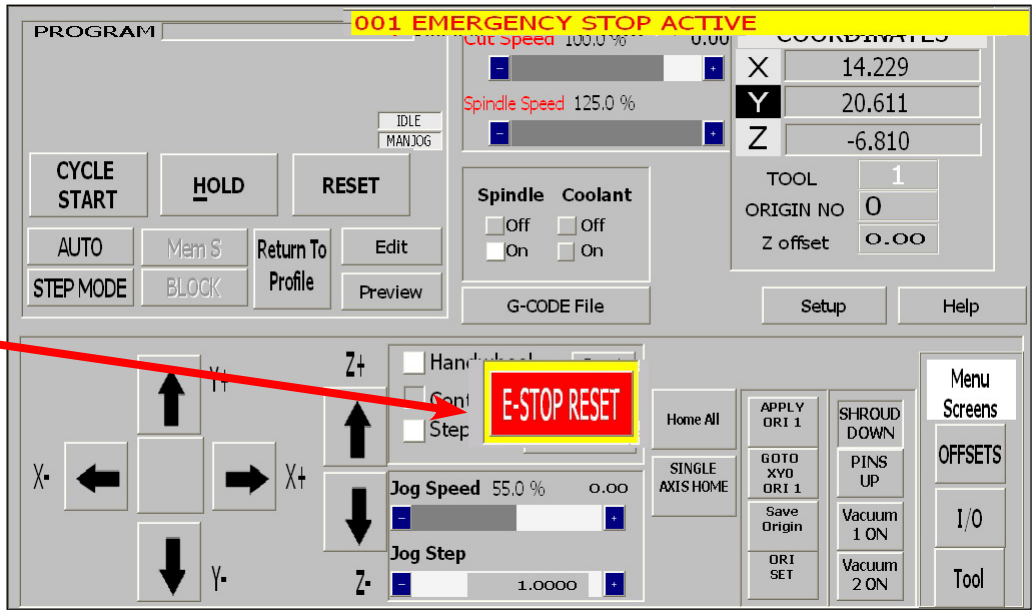

The Axis not referenced error will appear.
Click on "Home All" and all the axes will move to their home position. If any errors remain on the screen (i.e. Low Air Pressure,) rectify the problem and click on "Reset Errors" or "RESET" to remove the message.
The machine is now ready to be jogged.

Note: Pressing Home All will move the machine to the front left corner of the table.

This must be done every time the machine boots up.

Once the machine is in the Home position, it has a reference point from which it can pick up tools and locate offsets.

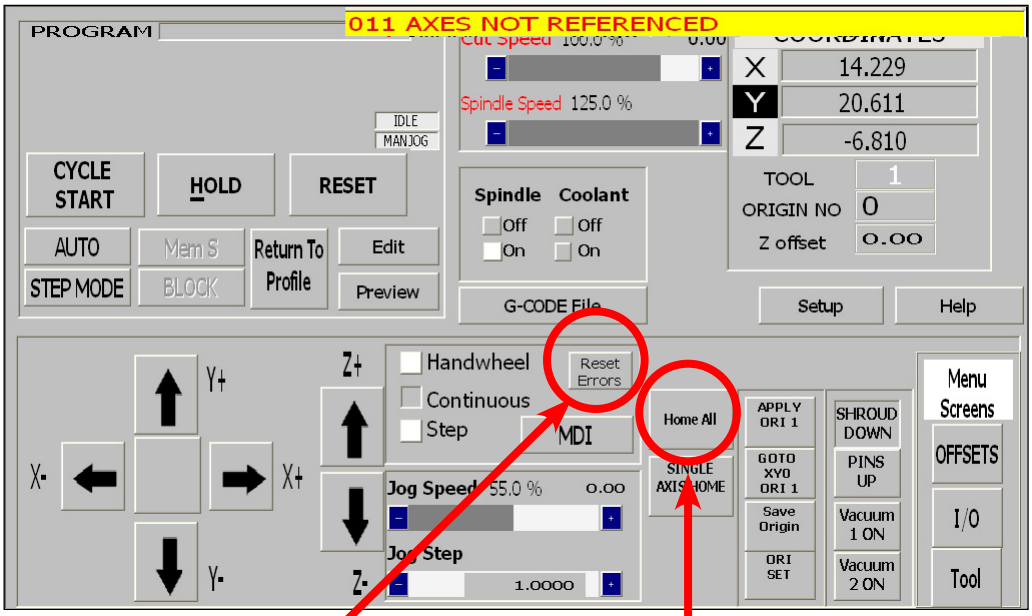

Reset Errors

Home All

2.2 Screen Callouts

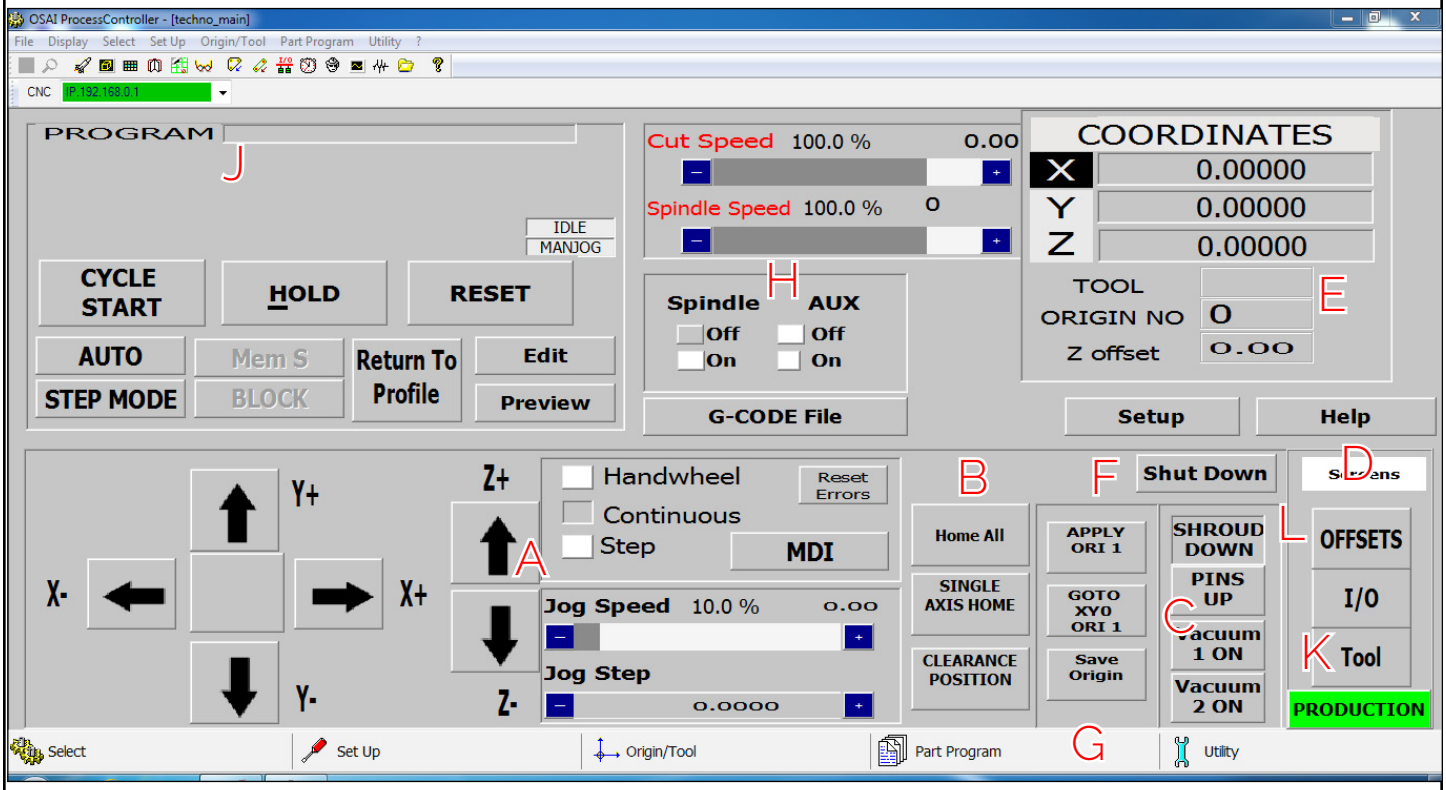

Above is the main screen of the Techno HDS interface.
To help understand the functions of the buttons they will be broken down into the following categories:

A- Jogging functions.
B-Homing Functions and Clearance Position
C-Pneumatic and Electrical Controls.
D-Menu Systems.
E-Coordinate Systems.
F-Origin Functions.
G-Save Origin Menu
H-Spindle and Coolant control.
I-Load G-code File.
J-Program Functions.
K-Tool Menu
L-Offset Menu.

A-Jogging Functions

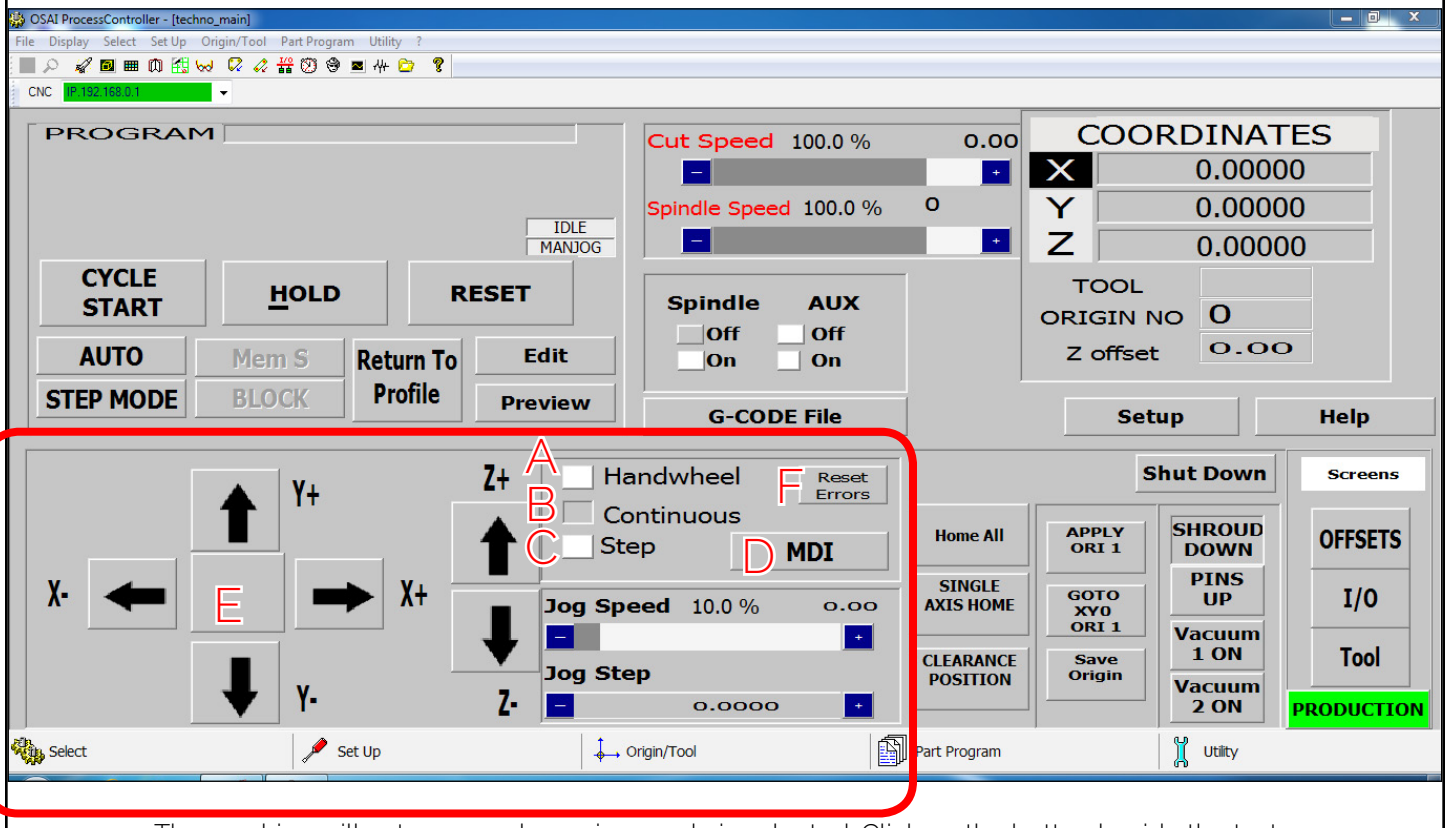

The machine will not move unless a jog mode is selected. Click on the button beside the text to select a mode.

A - Handwheel:
In this mode, the machine will operate via the MPG/Handwheel. Please see Handwheel operation for more information. All other functions are disabled when this is active.
B - Continuous:
Also, known as Jog Mode. The machine will move smoothly and continuously when the user clicks on the directional arrow associated with each axis. Speed is controlled by Jog speed and is a percentage of the max jog speed (800 ipm) for manual jog mode. (Ex: [50% of 800=400 IPM])
C - Step:
Also, known as Incremental Jog Mode. The machine will move by an exact amount, as specified by Jog Step variable when the arrow button is held down with left click. [Example: if jog step is set to .05 and I click X+. machine moves .05 to right]
D - MDI:
Manual Data Input, this feature allows the user to manually enter and execute a line of G-code. [Ex: (M3 S1800: spindle turns on at 18,000 rpm)]
E - Jogging Arrows:
By left clicking on these arrows the machine will move in the corresponding direction. These arrows are only functional if Continuous or Step mode is active.
F - Reset Errors: This will remove any warning/error messages that appear on the screen.

B-Homing Functions

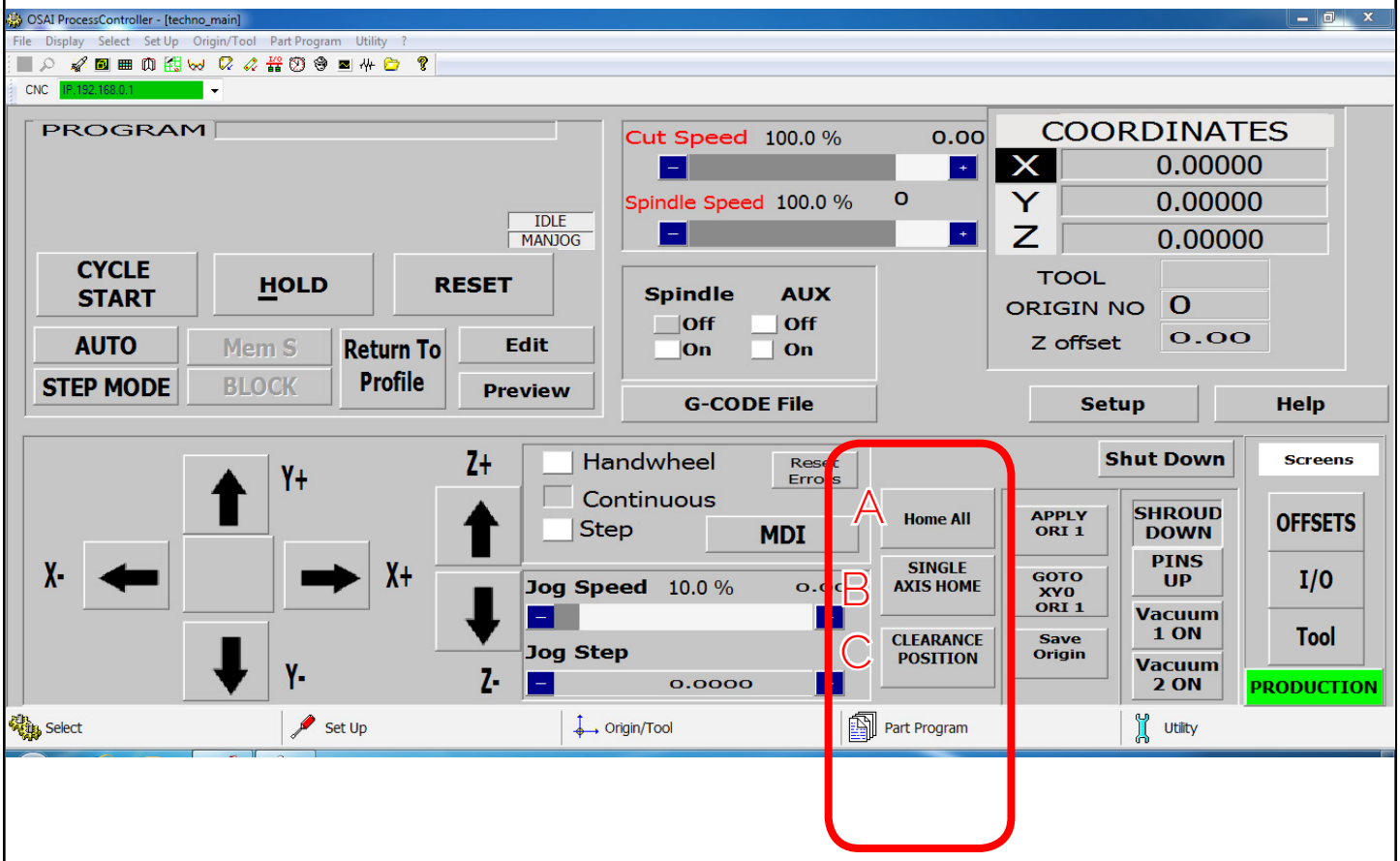

A - Home All:
Sends the machine to the home position. (Absolute XYZ = 0). The Z axis will first move up to its limit, then the X and Y axes will move simultaneously.

B - SINGLE AXIS HOME:
When this button is left clicked, each axis can be homed separately. When the button is active, the user then clicks on the arrow key for the axis to be homed to enable the operation. [Ex: click single axis home, click X-, machine will home the x-axis only]

C- CLEARANCE POSITION:
When this button is left clicked, the machine will run towards the back, in order to load and unload work

C-Pneumatic and Electrical Controls

The sections highlighted below are the buttons that control the pneumatic and electrical outputs for the controller.

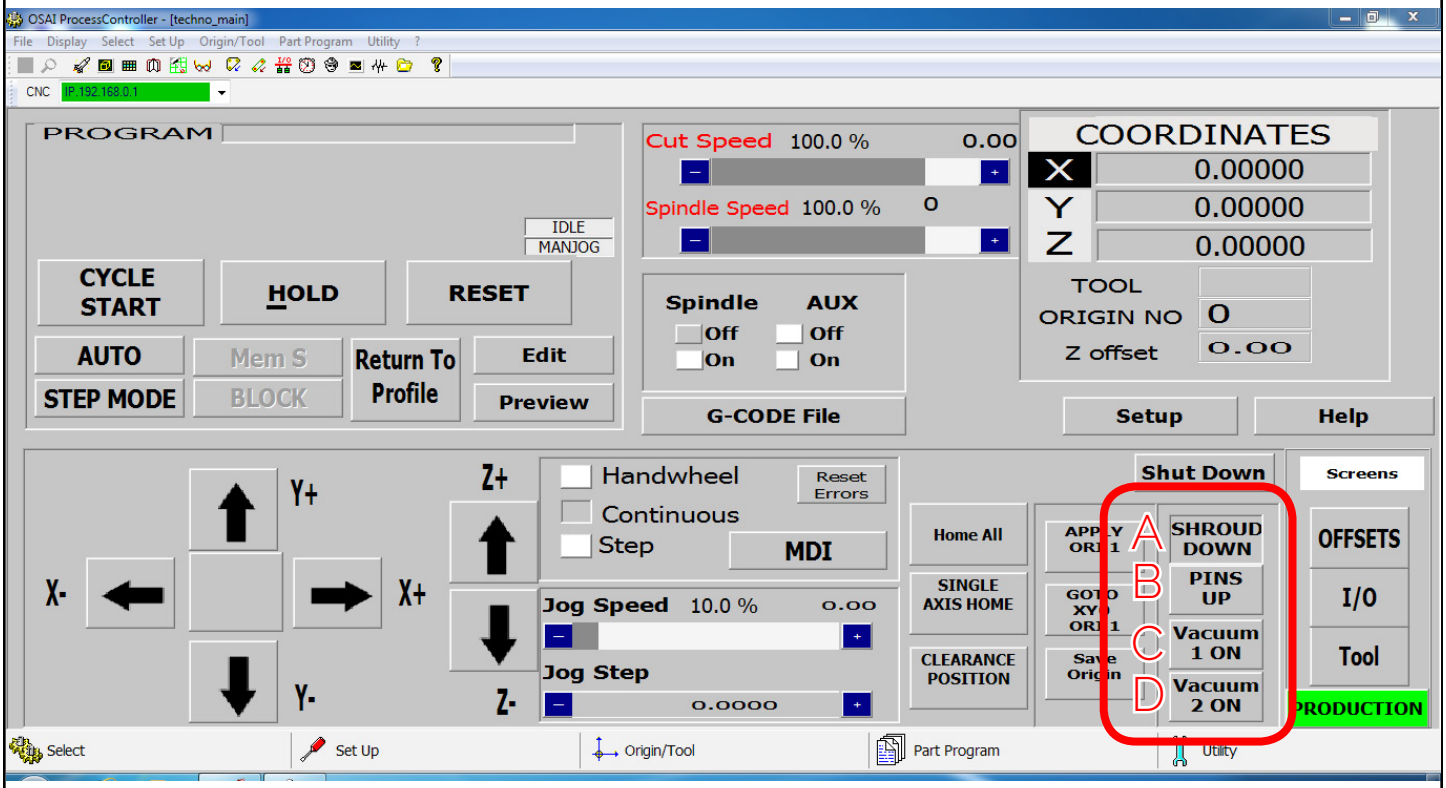

A - Shroud Up/ Down:
This button will raise or lower the dust shroud on the spindle.

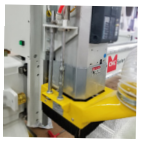
Down

Up

B - Pins Up / Down:
This button will raise or lower the pop-up pins on the sides of the table.

C - Vacuum 1 On/Off:
This button will turn Vacuum 1 on and off, if it is connected.

Down

Up

D - Vacuum 2 On/Off:
This button will turn Vacuum 2 on and off, if it is connected.

Shroud Up / Down and Pins Up / Down will only function if 90 lbs. of compressed air connected to the machine

Vacuum 1 on/off and Vacuum 2 on/off send 220 volts to the starter coil of the vacuum pump, thus activating the pump.

D-Menu Screens

The sections highlighted below are the Menu Screen options of the interface. The user can switch to these screens by clicking on the corresponding button.

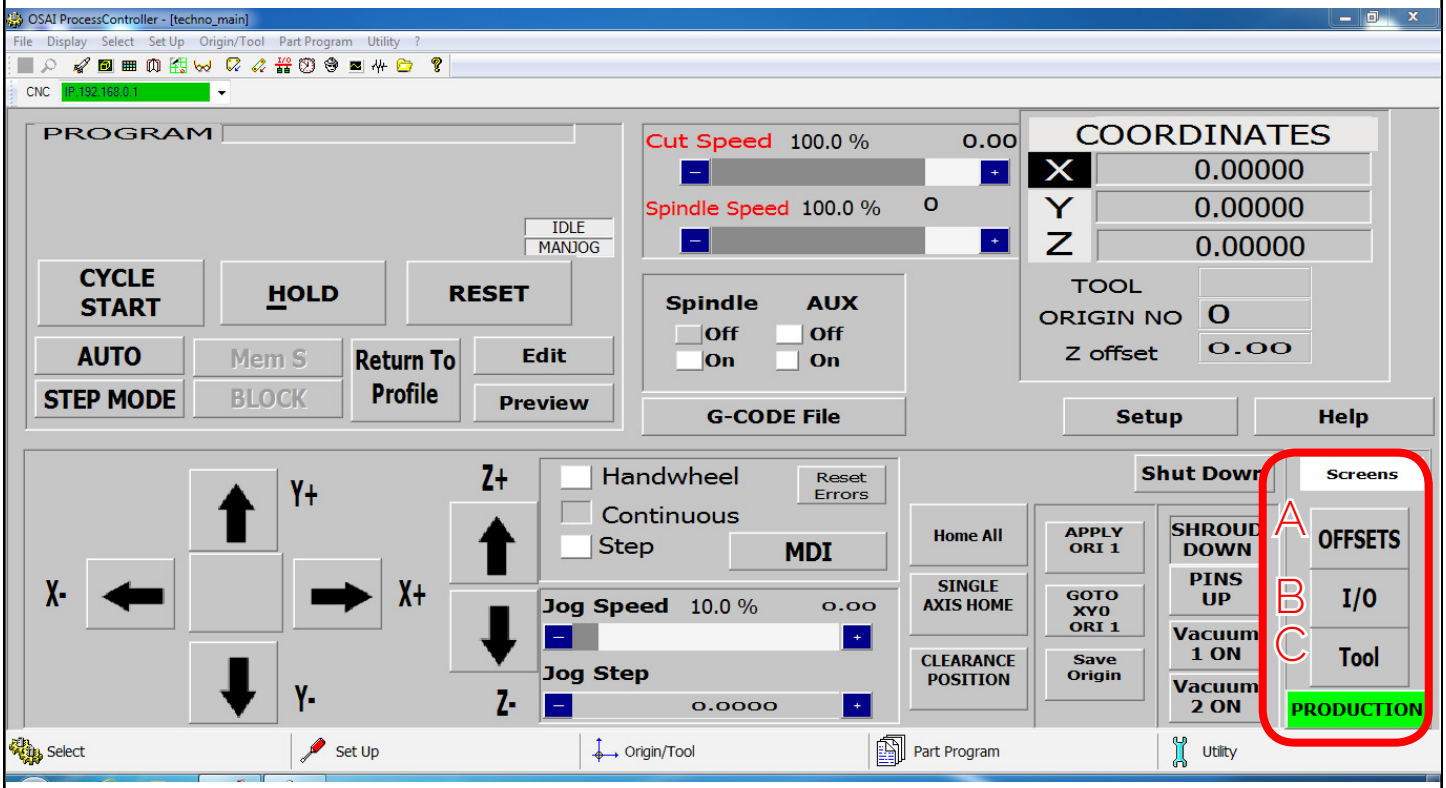

A - Offsets:
Opens the Offset Menu. In this menu the user can save multiple offsets/origins and apply them to the coordinate system.

B - I/O:
Opens the Input and Output screen diagnostics. These screens will show the states of the inputs and outputs.

C - Tool:
Opens the Tool Menu. In this menu the user can store tool lengths and change tool numbers.

E-Coordinate System

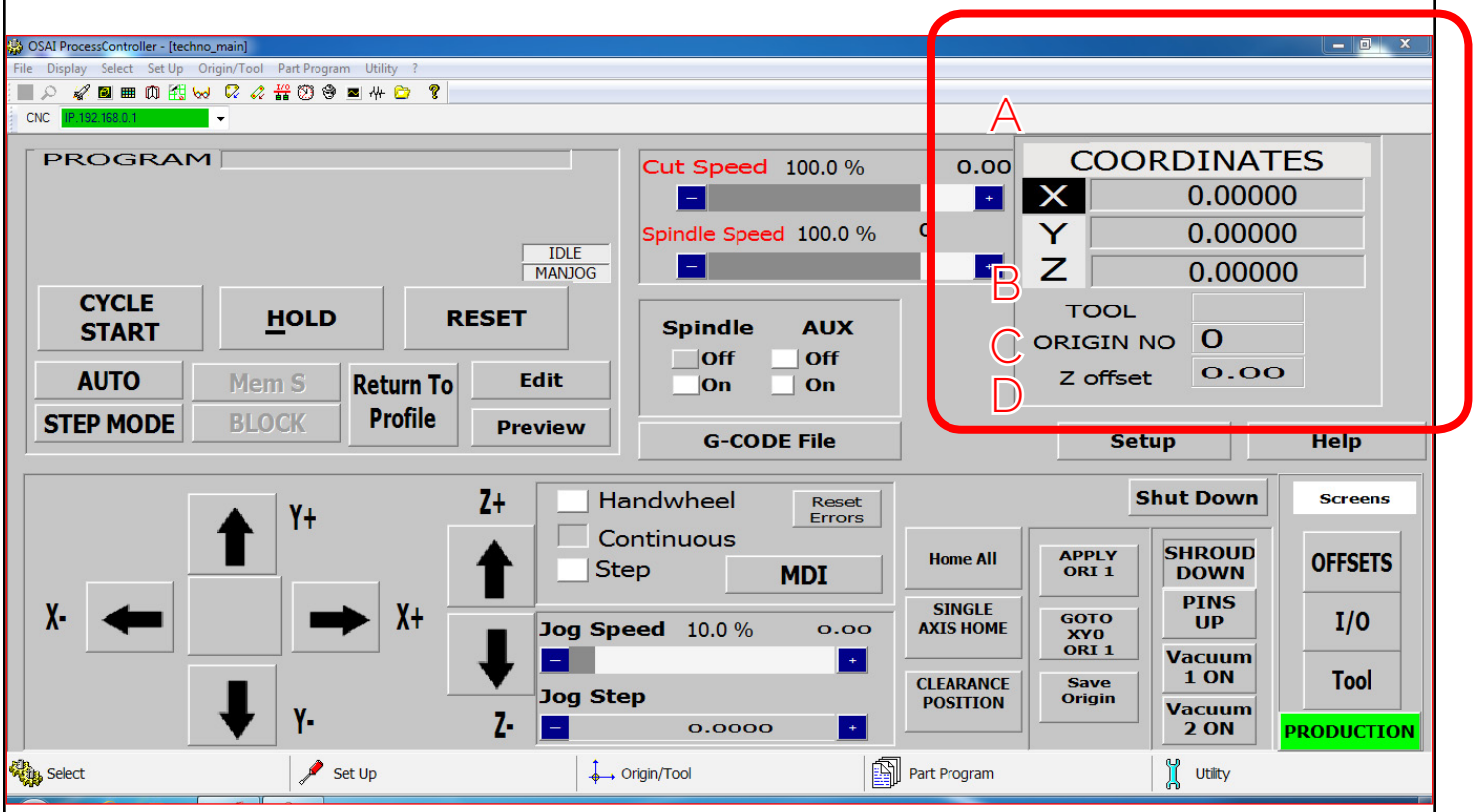

A - XYZ Coordinates:
This displays the location of the machine. If the Origin No is zero,the numbers displayed are the distance from the Home position (Absolute XYZ = 0). If there is an Origin Number active, the numbers displayed are the distance from that origins zero position.

B - Tool:
This displays the tool that is currently in the spindle. If the number reads a single digit then there is no offset applied to that tool at this time. When the Tool displays 1.1, or 2.2, or 5.5 etc then the Z-offset is active. The Z-offset needs to be active when setting the origin.

C - Origin No:
This displays the active origin/ coordinate system. When it reads 0, no origin is active and the coordinate system displayed is the from the Home position. The system is setup to accommodate 8 origins, but many more can be made available.

D - Z Offset:
This is the amount of Z-offset being applied to the tool. Z-offset is the distance from the home position and it is set in the Tool menu using the tool calibration block.

F-Origin Functions

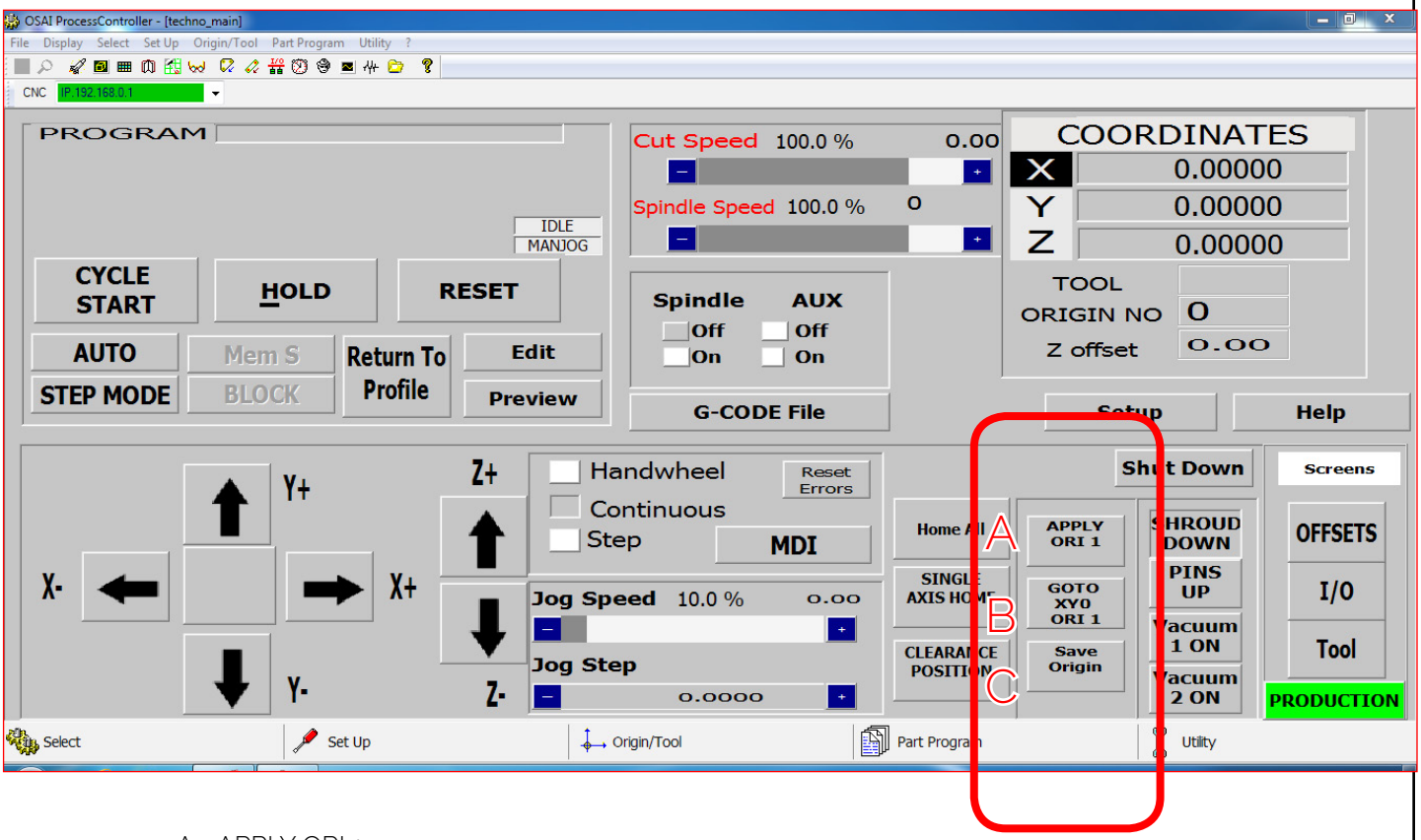

A - APPLY ORI 1:
Left clicking on this button activates Origin 1 for the coordinate system.

B - GO TO XY0 ORI 1:
Left clicking on this button moves the Z axis to the home position and the XY axes to the X-zero, Y-zero for Origin 1. (XY=0)

C - Save Origin:
Left clicking on this button opens the Save Origin Screen Safe Mode Option. In this screen the user can save the position of the machine as the Origin. This is where the user sets XYZ zero. This Safe Mode Option will provide additional warnings and opportunities for the user to ensure that the origin is saved correctly.

Origin can also be called the XYZ zero point.

G-Save Origin Menu

When the Save Origin button is clicked on the main screen, this screen will open. This screen provides a reminder to identify the tool in the tool holder before saving an origin.

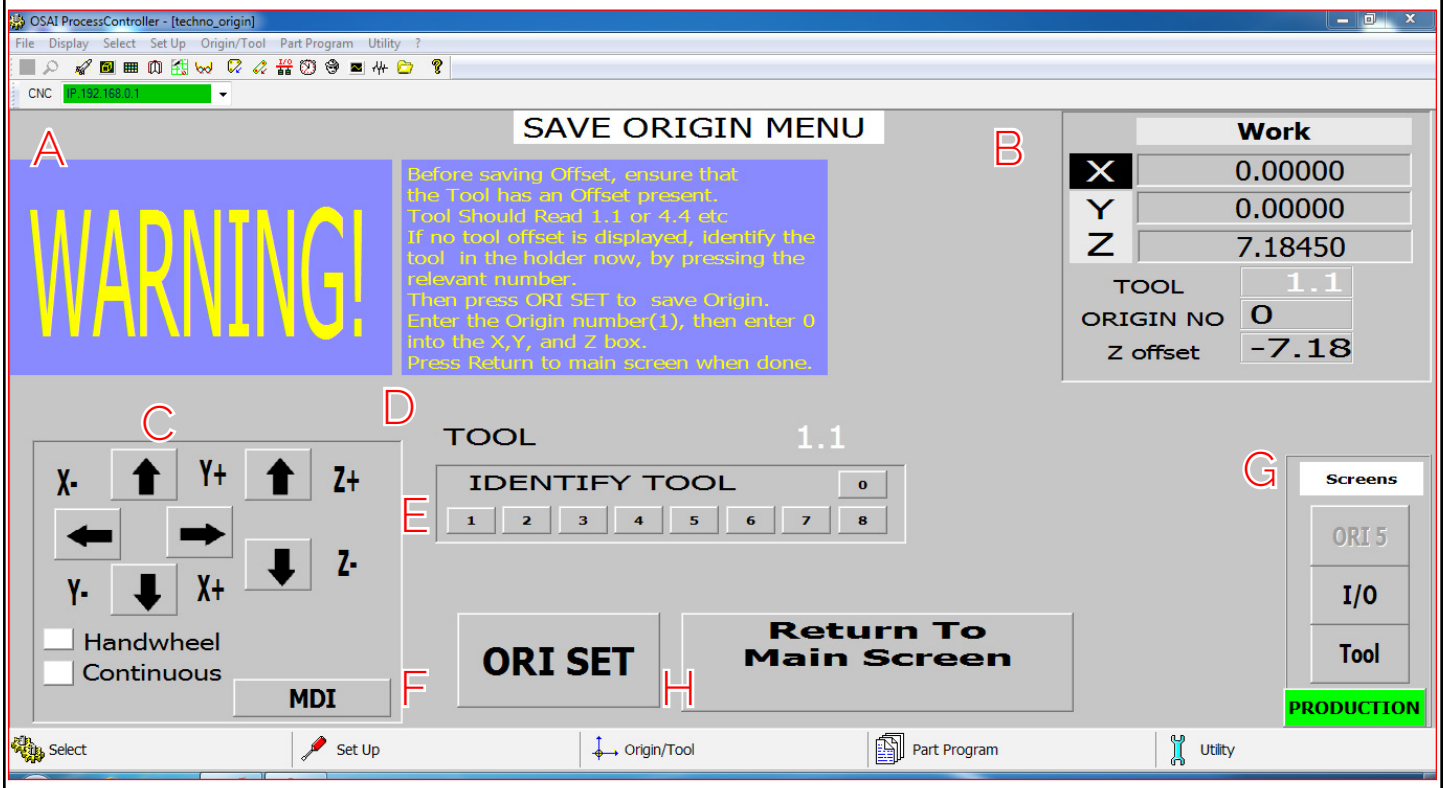

A - Warning Message:
This gives the user instructions on how to save an origin correctly.
B - Coordinate System:
This displays the coordinate system, as explained in Section E.
C - Jog Functions:
This is a minimized version of the jog functions, as explained in Section A.
D - Tool:
This displays the Tool Number. It should read 1.1, or 2.2, or 6.6 etc, indicating that an offset is applied.
E - Identify Tool:
Left clicking on one of these buttons will apply the offset to the Tool number, or rename / reidentify a tool.
F - Ori Set:
Will open the Origin Preset Screen where the user will enter the Origin number to be saved and set XYZ to zero.
G - Menu Screen:
Changes the screen.
H - Return to Main Screen:
Once the Origin has been set, left clicking on this button will return to the main screen.

This screen gives the user an opportunity to identify the tool in the holder.

H-Spindle and Coolant Control

The section highlighted below allows manual control on the Spindle and Coolant.

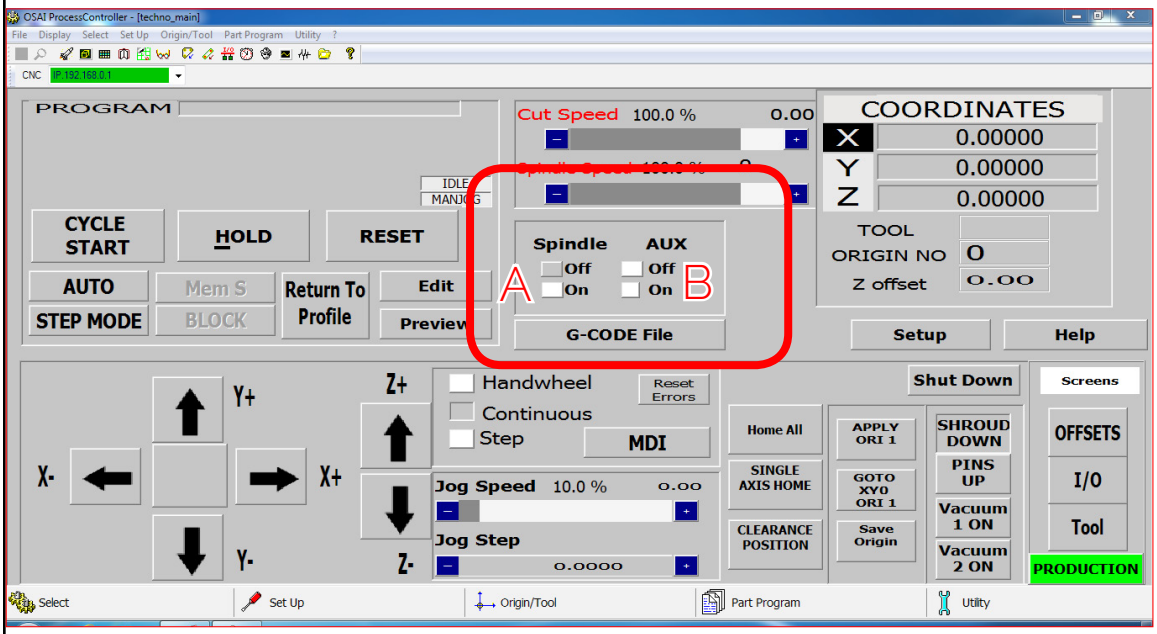

A-Spindle On/Off :

If you press the button beside the ON switch, you will turn the spindle on. If you press the button beside the OFF switch, you will turn the spindle off.

B-AUX (Coolant) On/Off :

Pressing the button beside On will turn the AUX (coolant) on, pressing the button beside Off will turn the AUX (coolant) off (it will do nothing if the system does not have a coolant).

I-Load G-Code File

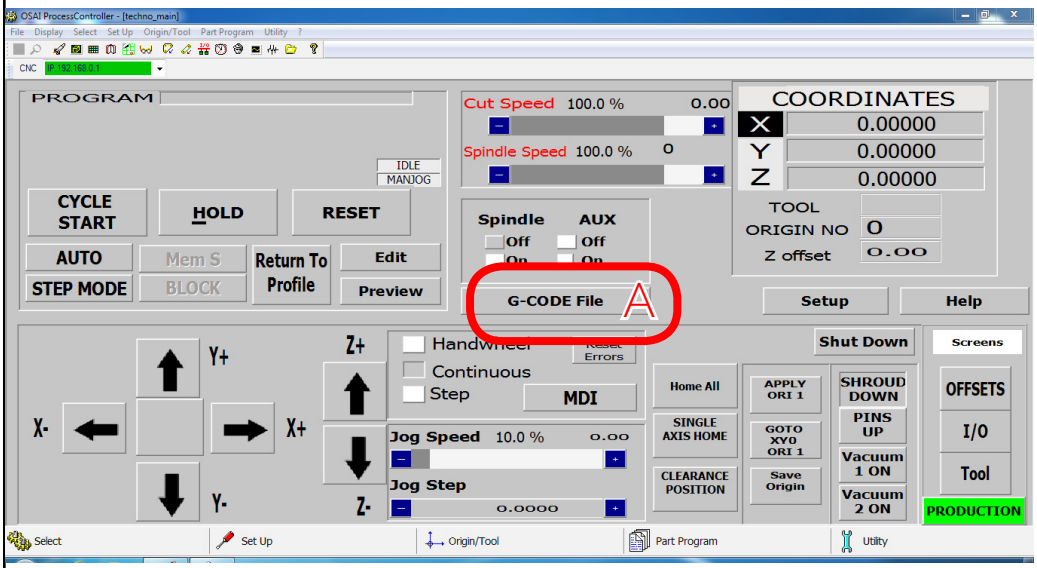

A - G-code File:

Pressing this button will open the G-code file folder, allowing the user to activate or deactivate a G-code file.

J-Program Functions

The section highlighted below contains the program functions

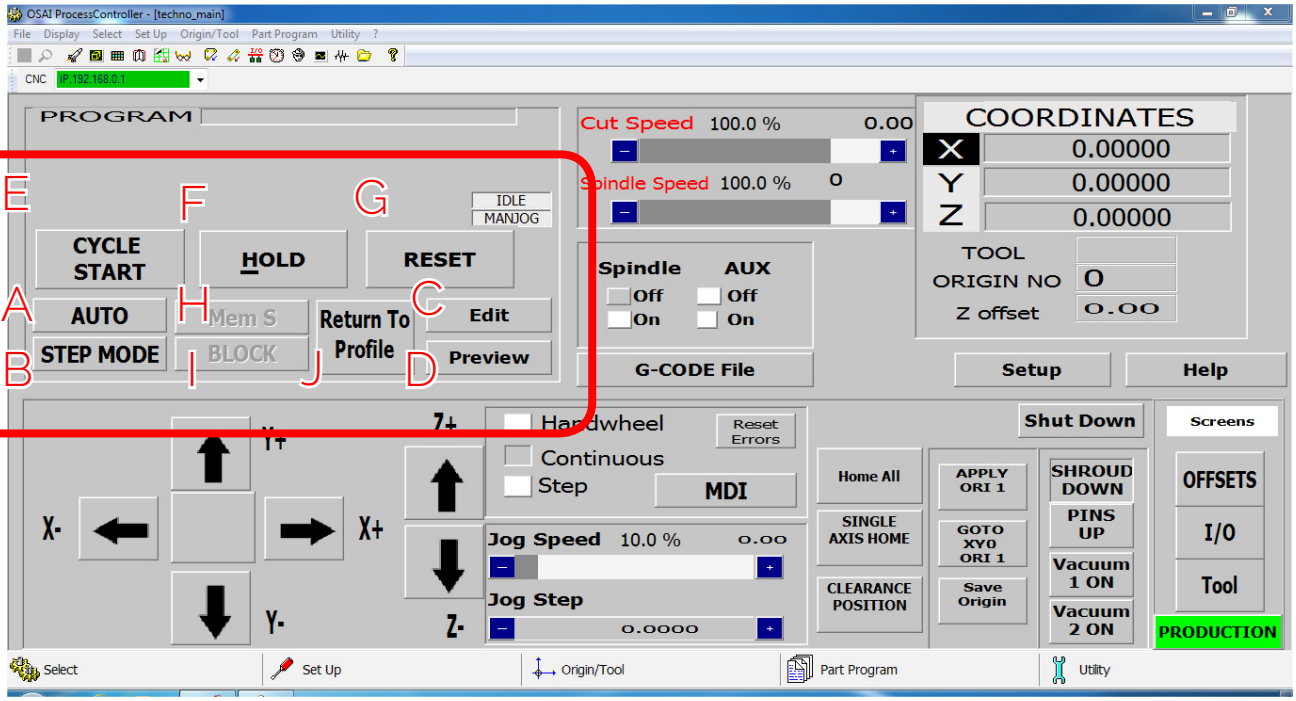

A - AUTO: When this button is active, the G-code file will run in continuous mode.
B - STEP MODE: When this button active, the G-code file will run in Step mode.
C - Edit: Left clicking on this button will open the file directory allowing the user to edit the g-code in the text editor
D - Preview: Left clicking on this button will open the file directory allowing the user to preview the G-code file in the Techno Previewer.
E - CYCLE START: Pressing this button will start the active G-code file, in either Step or Auto mode. If no mode is selected then nothing will happen. Cycle start will also carry out commands in MDI mode.
F - HOLD: Pressing this button will pause the operation that is in progress. Releasing hold and pressing Cycle Start will continue the operation.
G - RESET: Pressing this button will abort the operation that is in progress. Reset will clear the Tool, origin and file settings.
H - Mem S: This button will search the G-code file to find the point where the last Reset occurred. Then the file can be started from this point.
I - BLOCK: This button will open the block window, allowing the user to select a specific block of G-code to run. (ie N400 to N1200).
J - Return To Profile: If the machine is jogged off the part during Hold, it will need to return the point it was in on the G-code file if you want to continue the operation. Left clicking this button and then holding down the directional arrow for each axis will move the machine back to the correct position. Left clicking this button will pause whatever action is taking place.

K-Tool Menu

When Tool is clicked on the main menu, the screen below will open up. In this screen tool

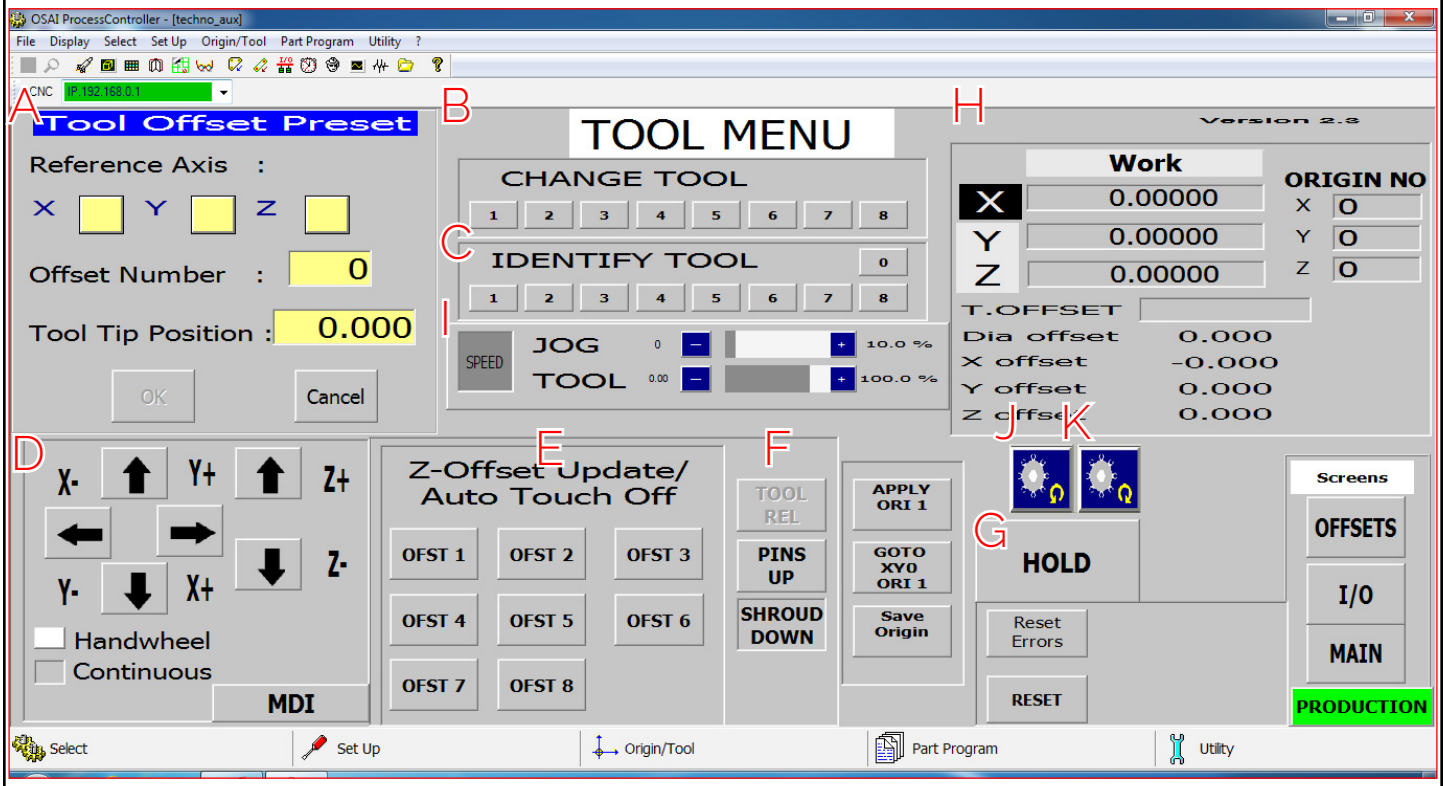

A - Tool Offset Preset:
This section allows the user to manually enter tool offsets.
B - CHANGE TOOL:
Left clicking on one of these buttons will make the machine pick up the corresponding tool number.
C - IDENTIFY TOOL:
Left clicking on one of these buttons will change the tool number on the screen and apply the Z-Offset to that specific tool
D - Jog Functions:
This is a minimized version of the regular jog functions.
E - Z-Offset Update:
Pressing one of these buttons will cause the Tool to move down until it touches the Tool Calibration Block, and then it will store the Z-offset for that tool number.
F - Pneumatic Controls:
This section controls dust shroud, chuck control and pop up pins.
G - HOLD:
Pressing hold during a tool change will cause the operation to be aborted.
H - Coordinates System:
This displays the system coordinates and active origin, etc.
I - SPEED:
Jog speed, and speed the machine moves when changing tools can be controlled by these settings.
J - Rotate Tool Carousal Anti-Clockwise: Turns the tool carousal circularly to the left.
K - Rotate Tool Carousal Clockwise: Turns the tool carousal circularly to the right.

L-Offset Menu

When Offset is clicked on the main menu, the screen below will open. In this screen multiple offsets can be saved and recalled.

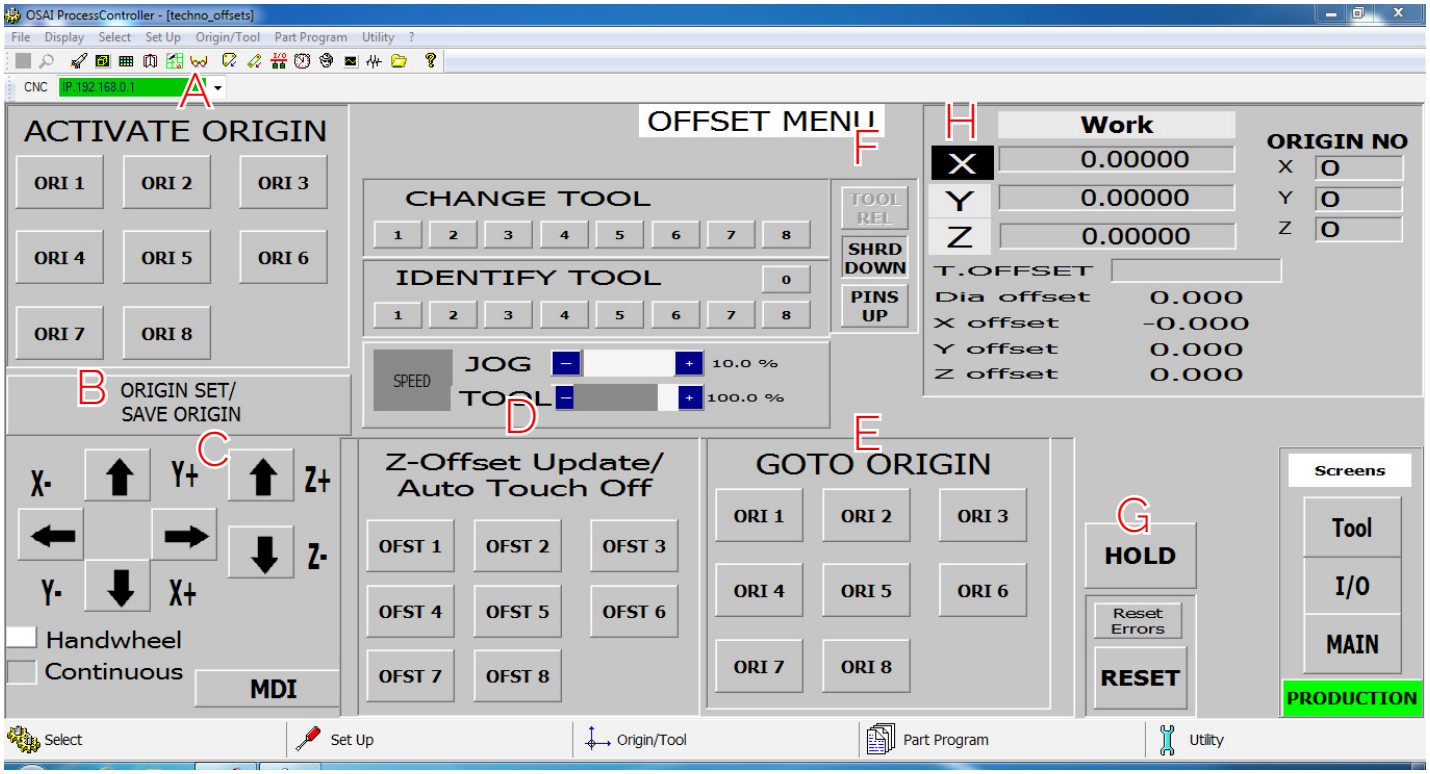

A - ACTIVATE ORIGIN:
Left clicking on these buttons will activate the corresponding Origin.
B - ORIGIN SET/SAVE ORIGIN: Left clicking on this will open the Origin Preset screen. This will allow the user to save the current position of the spindle in a specific origin number.
C - Jog Functions:
This is a minimized version of the regular jog functions.
D - Z-offset Update:
Pressing one of these buttons will cause the Tool to move down until it touches the Tool Calibration Block, and then it will store the Z-offset for that tool number. Each tool is specified to its offset. (Ex: Identify tool 1, then press offset 1, identify tool 2, then press offset 2.)
E - GO TO ORIGIN:
Left clicking on one of these buttons will move the router to the XY zero position for that origin number. The Z axis will move to the home position.
F - Pneumatic Controls:
This section controls dust shroud, chuck control and pop up pins.
G - HOLD:
Pressing hold during an operation will cause the operation to be aborted.
H - Coordinates System:
This displays the system coordinates and active origin, etc.

Section 2.3 File System | Network System

The PC is connected to the OSAI controller by an ethernet cable.

The Techno interface communicates in real time with the OSAI controller via the ethernet cable to allow jogging and other manual functions.

In order to run G-code files to the OSAI controller, they must be copied onto the OSAI controllers hard drive.

The OSAI controller is identified as a network drive called

Y: OEM
and
X: USR

G-code files must be copied into the Programs folder in order for the OSAI controller to locate and run them.

For convenience there is a shortcut to this folder on the desktop of the controlling PC. This folder can be called “Programs” or “G-code Files.”

In order to run a G-code file, it should first be dragged into this folder, and then accessed through the interface.

NOTE: The OSAI controller runs in a Linux type operating system, and subsequently file names can only be 8 characters long, and they are case sensitive.

Section III: Operating Tutorials

3.1 Jogging the machine

The machine has three jog modes:

- Handwheel:
  In which the machine is controlled by the handwheel / manual pulse generator on the side of the machine.
- Continuous:
  In which though fluid and smooth continuous movement the machine is controlled. Speed is controlled by the Jog Speed Bar.
- Step:
  Similar to continuous, however with every mouse click the machine moves a distance determined by the Jog Step Bar.

A mode MUST be selected in order for the machine to move. The selection box to the left of the text indicates what mode is selected.

Click on the first box to enable Handwheel Control.

Note:
You cannot change tools or save origins while in Handwheel Jog Mode.

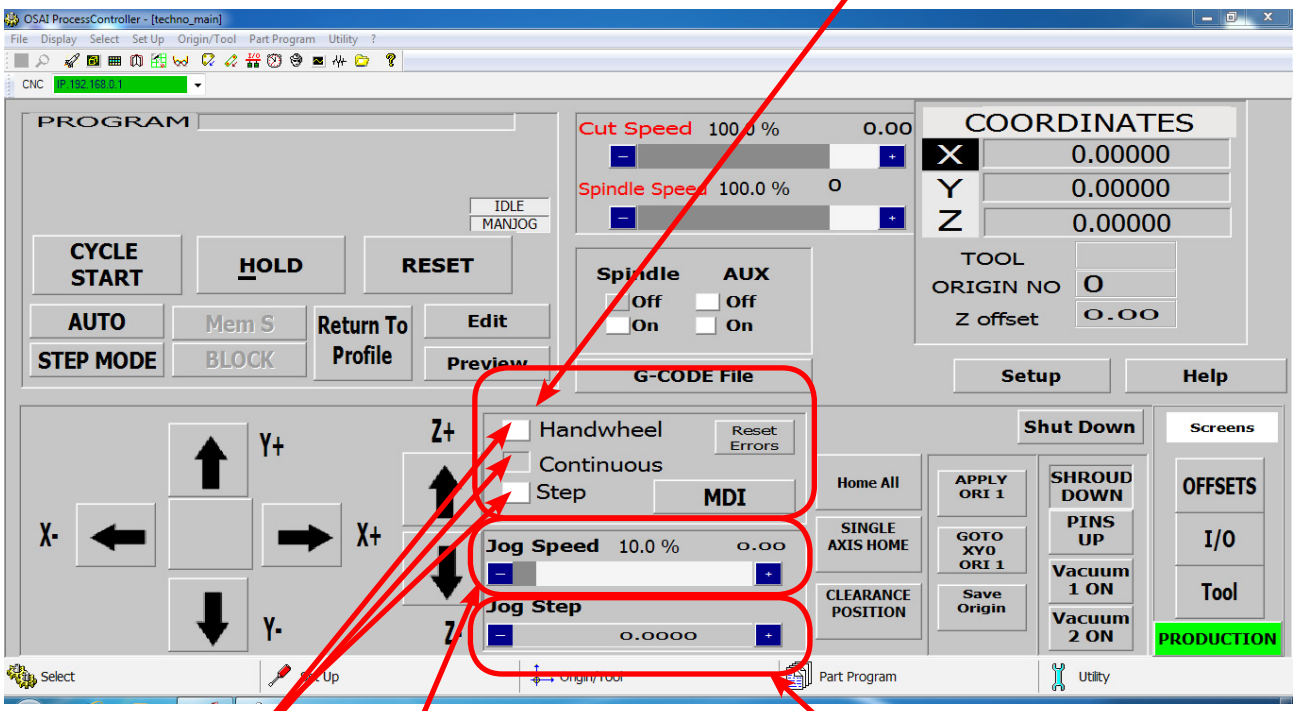

Click on the box beside the mode name to select it.

Increase (+) or decrease (-) the Jog Speed by pressing the (+) or (-) box. Speed is shown in % of maximum speed. Actual speed is displayed when the machine is running.

Increase or decrease the Jog Step by pressing the (+) or (-) box. Step size in inches will be shown.

MDI mode stands for Manual Data Input. Activate this mode by clicking the icon in the Jog box. MDI.

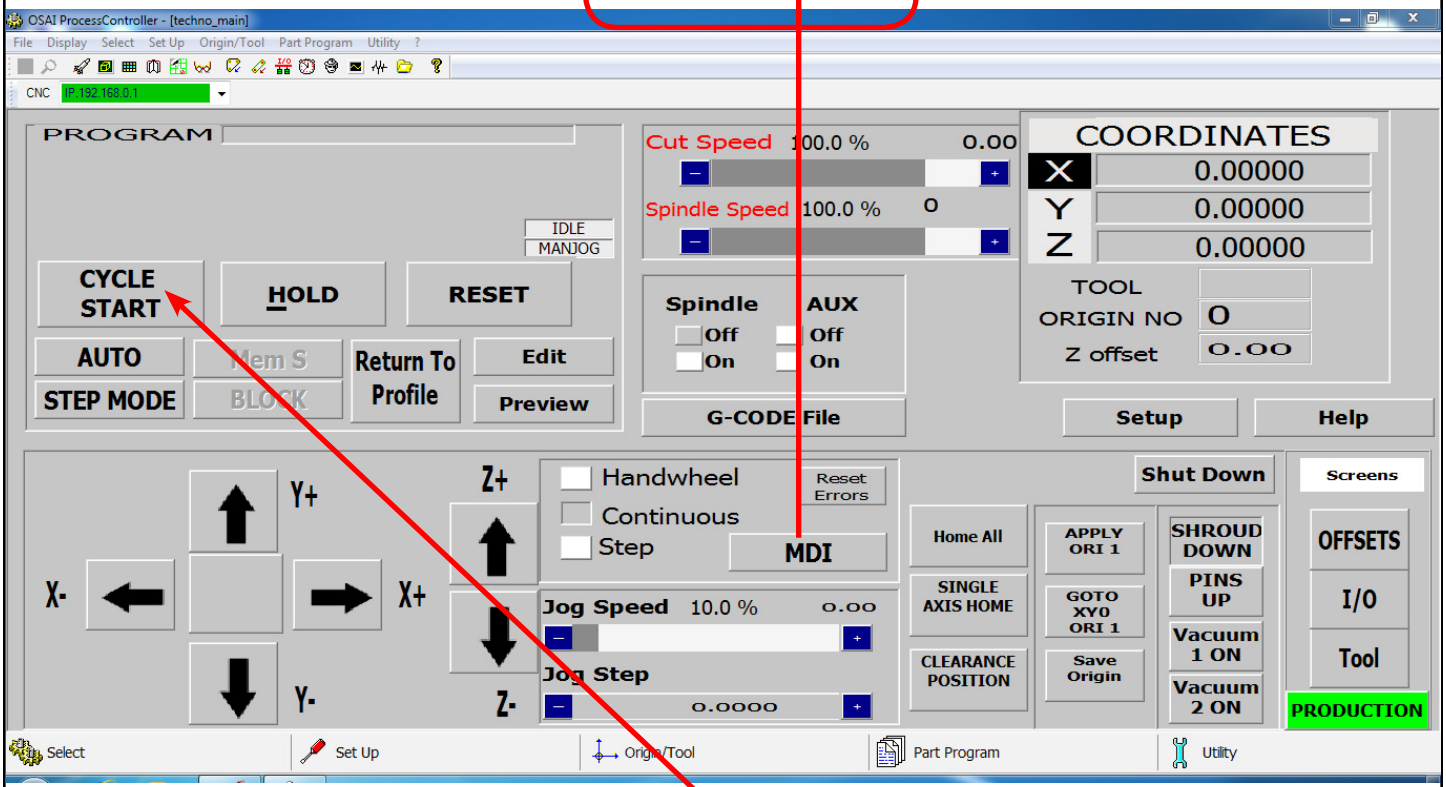

When this mode is selected a Test box will appear.

G-code commands can be entered in this box, then clicking Cycle Start will run the command.

Eg,

G0 X10Y10 in the box then Cycle start will move the machine to X10 Y10

M3 S18000 will turn on the spindle at a speed of 18000rpm

M5 will turn off the spindle.

(UAO,03) will activate Origin 3

M6 T4 will pick up tool 4

3.2 Learning Tool Lengths

Tool lengths will record how long the tool is in the holder and record the offset value. This will allow multiple tools to be used in a single file.

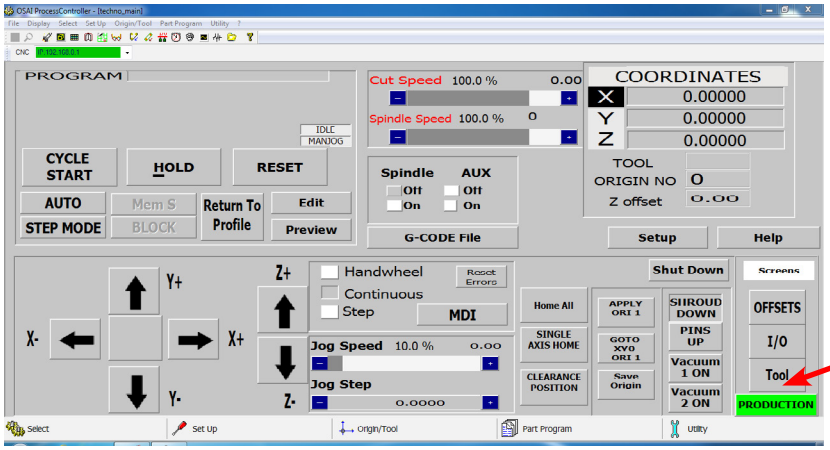

Tool Stand Locations should be pre-learned from the factory. If the Tool locations are incorrect, see Learning Tool Locations section of the appendix.

1

To learn tool lengths.
Click on Tool in the main screen of the Techno interface.

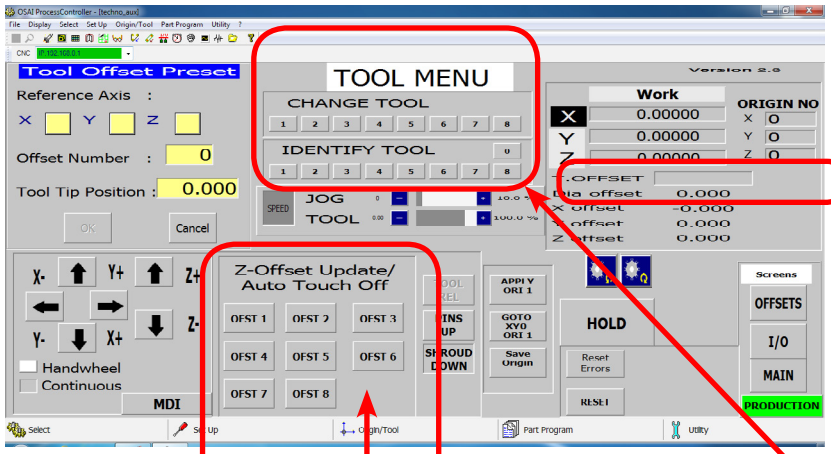

Warning take note of the T.OFFSET number. If it tries to return a tool to an occupied tool location, it can cause damage to the tool stands.

2

Place the router bits in the tool holders, ensuring that they are secure.

Place the tool holder in the chuck. This can be done manually by pressing the green button on the side of the spindle, then placing the tool holder in the spindle and releasing the button. If the tool is in the tool stand, press the corresponding button under the Manual Tool Change bar in the Tool Screen.

(Continued on next page)

3

-Click Reset to remove any offsets.
-Click OFST # . Where # is the number of the Tool you have in the chuck.

The machine will go to Top of the Z travel, then slowly move down to the pad. It will touch the brass colored section of the pad, retract, and then move down again to confirm the value.

Repeat this procedure for the other tools.
Tool Lengths are now learned. Press "RESET" to remove Blue Notification

3.2 Learning Tool Lengths (Continued)

Tool lengths will record how long the tool is in the holder and record the offset value. This will allow multiple tools to be used in a single file.

Identify or Change Tools by pressing these buttons. 0 is an empty chuck.

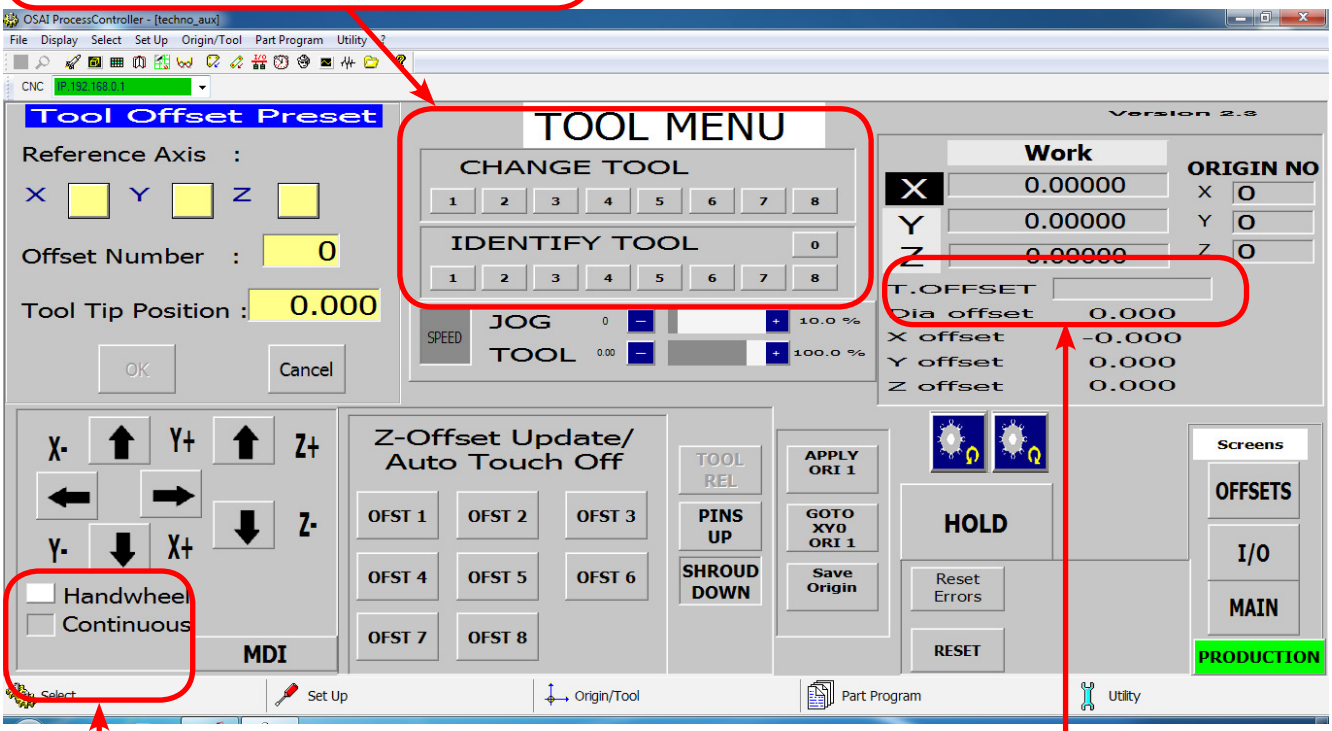

If jogging the machine make sure one of these buttons is clicked, otherwise it will not move.

This displays the Tool that is in the chuck.
1 means no offset is applied.
1.1 means offset is applied.

3.3 Saving An Origin | Setting XYZ zero position

When setting an origin, make sure the correct tool is in the chuck and this tool has been identified. The T.OFFSET box in the top right hand side of the screen should be 1.1 or 2.2, etc ,for whatever tool is in the chuck. If the T.OFFSET box only reads one digit, the tool must be identified in the Tool screen.

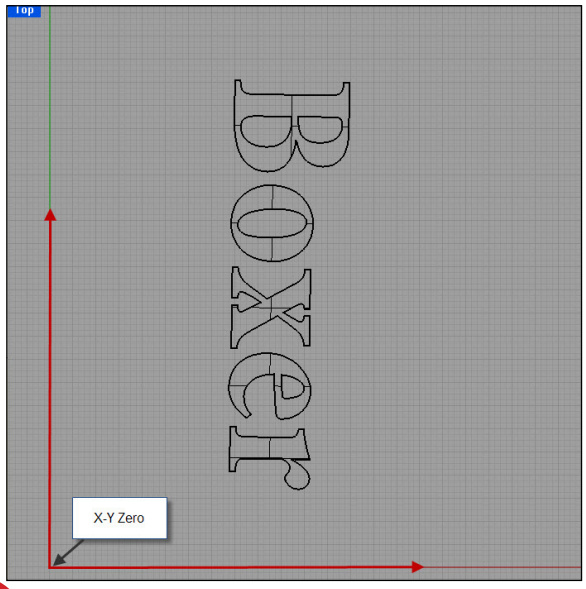

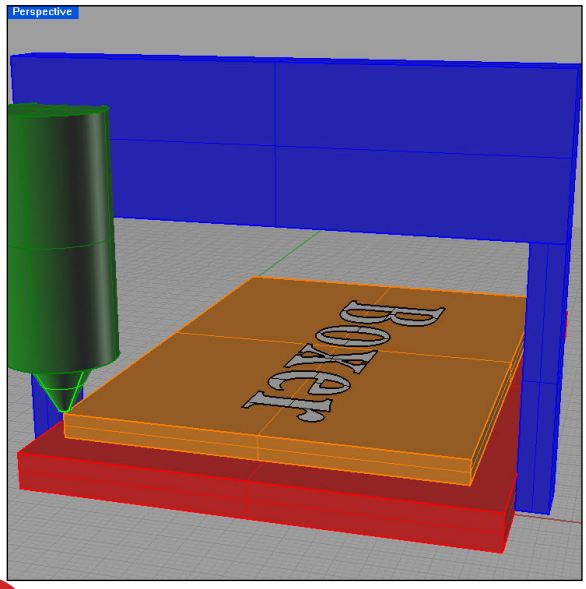

1

XYZ zero position is the location point on a drawing in a CAD/CAM package where X,Y and Z all equal zero. Generally, XY zero is on the bottom left corner and Z zero is the top of the part. The letters to be cut are located away from the XY zero.

2

To set the Origin:
Move the machine to the location on the table you want to set as XYZ. Use the handwheel for precision.

Continuous must be active to save origin.

3

Once in position switch to Continuous Jog mode.

Note: You cannot save an origin with the handwheel active.

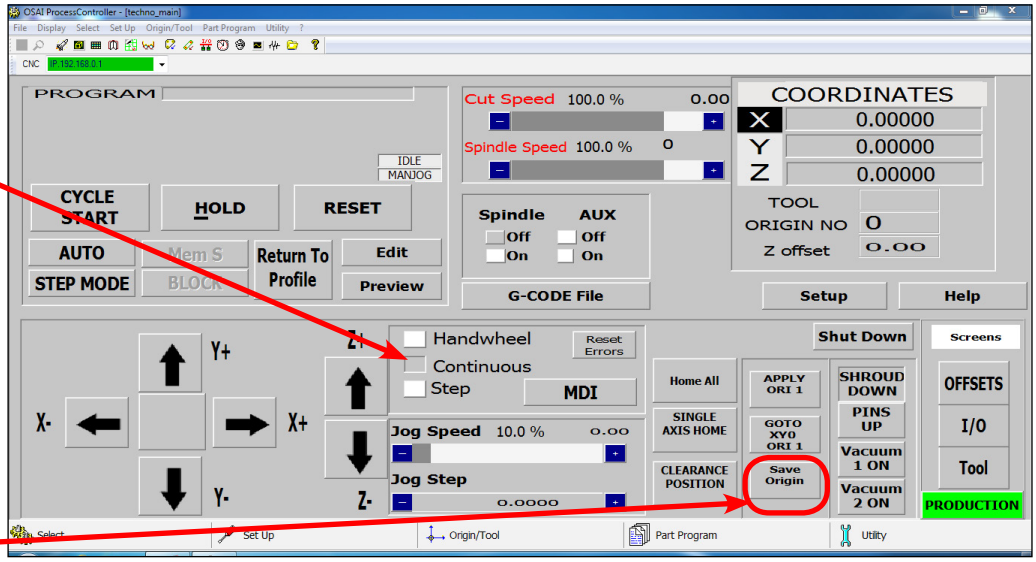

1

The Save Origin screen will open, and a reminder to load the tool number will appear. Click the number of the tool that is in the spindle, then click ORI SET.

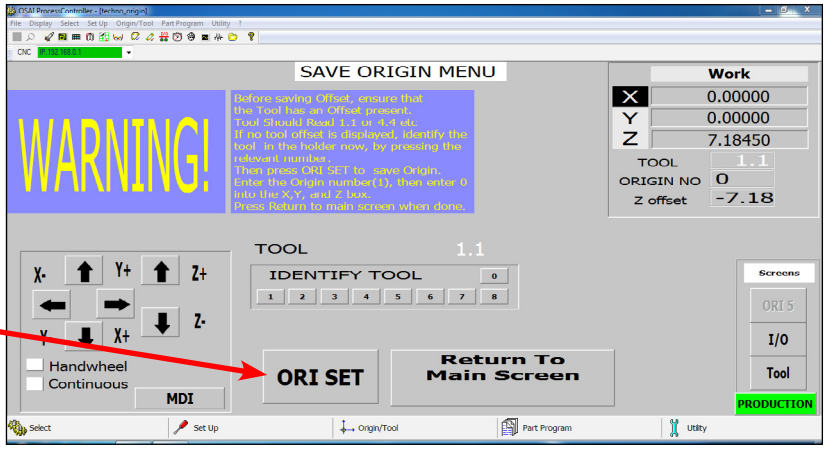

2

Enter the Origin Number on top and zero in the XYZ boxes.
- Click OK.
- Click Return to Main Screen, when done.

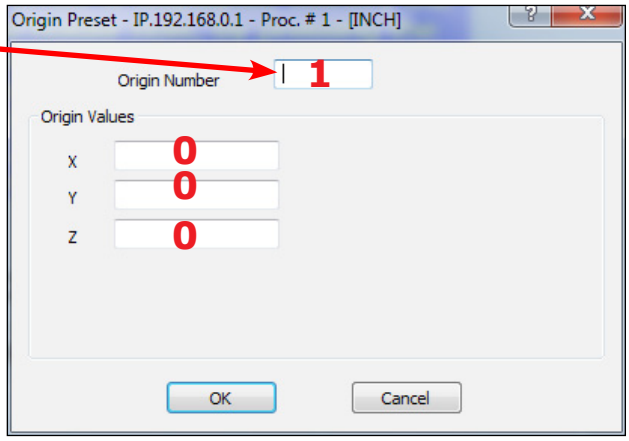

3

The coordinates displayed will still be the Home Coordinates. That is the coordinate system from the home position.
To display the Origin just saved. Click on Apply ORI 1.
The coordinate system will now switch to the origin you saved.

The data (UAO,01) in the G-code file will also switch coordinate systems. So if you hit reset and the coordinate system returns to the Work/Home Coordinates when the G-code file is started, the controller will read the (UAO,01) command and apply Origin 1.

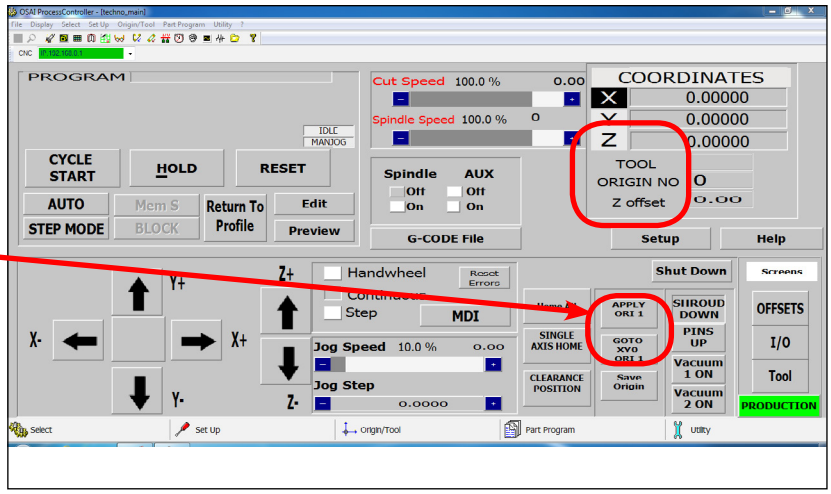

The origin is now set. If you click reset, the coordinate system will switch back to home coordinates, and the tool offset will be removed. Identifying the Tool in the chuck and clicking Apply ORI will enter the values again.

3.4: Preparing a G-Code File

The G-code file must be copied into the programs folder on the PLC directory.
There is a shortcut to this on the main desktop.
- Drag your files from the USB to the desktop icon or copy and paste.
- Files must be no more than 8 characters in length.
Files can be copied in to the programs folder, but make sure the file G600 is in the same folder as your file.

This data must be in the G-code file. If the correct post to Techno Osai HDS machine is used in the CAM package, then it will be entered automatically.

Data For a Techno Osai G-code File.
Start of File:

G70	(Programming in Inches)
G90	(Absolute Programing)
G40	(Disables Cutter Diameter compensation)
G80	(Disable Can Cycles)
G17	(Circular interpolation on XY plane)
G27	(Continuous sequence operation with automatic speed reduction on corners)
M143	Edge Pop Up Pins Down)
M49	(Dust shroud down)
G600	(Loads a set of parameters into controllers amplifiers. This is a txt file that needs to be in the directory of the G-code file.)
(UAO,01)	(Applies Origin 1 to machine coordinates. Ideally user will have an option to select Origin number 1-5)

Tool Changes:

T1 M6	(Standard Tool change command)
M3 S18000	(Spindle on and RPM value)
(DLY,05)	(Wait 5 seconds for spindle to achieve set speed)
G27	(Apply continuous sequence operation with automatic speed reduction)

Circles:

G02	(Clockwise with Arc Center (I-J) Absolute)
G03	(Counter Clockwise with Arc Center (I-J) Absolute) R is also accepted, but I-J's must be Absolute.

(Continued on next page)

3.4: Preparing a G-Code File (Continued)

End of File:

M05	(Spindle Off)
M48	(Dust shroud up)
M30	(File end)

So the start of a typical file will look like this.

G70
G90
G40
G80
G17
G27

M143
M49
G600

(UAO,01)
T1 M6
M3 S18000
(DLY,05)

Then the customers G-code.

M05
M48
M30

3.5 Running a G-Code File

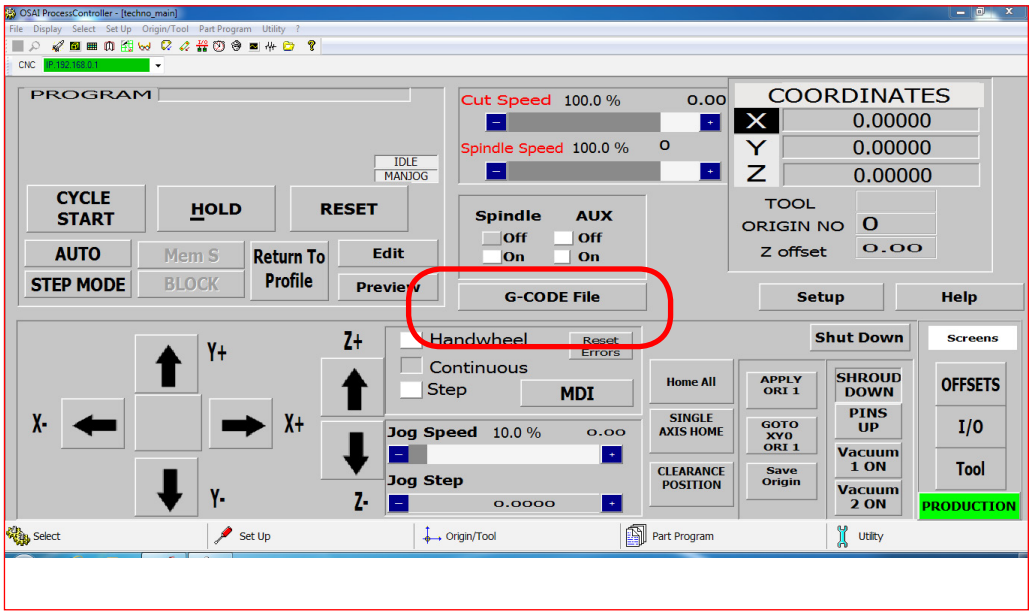

1

Click on G-CODE File to access the file menu.

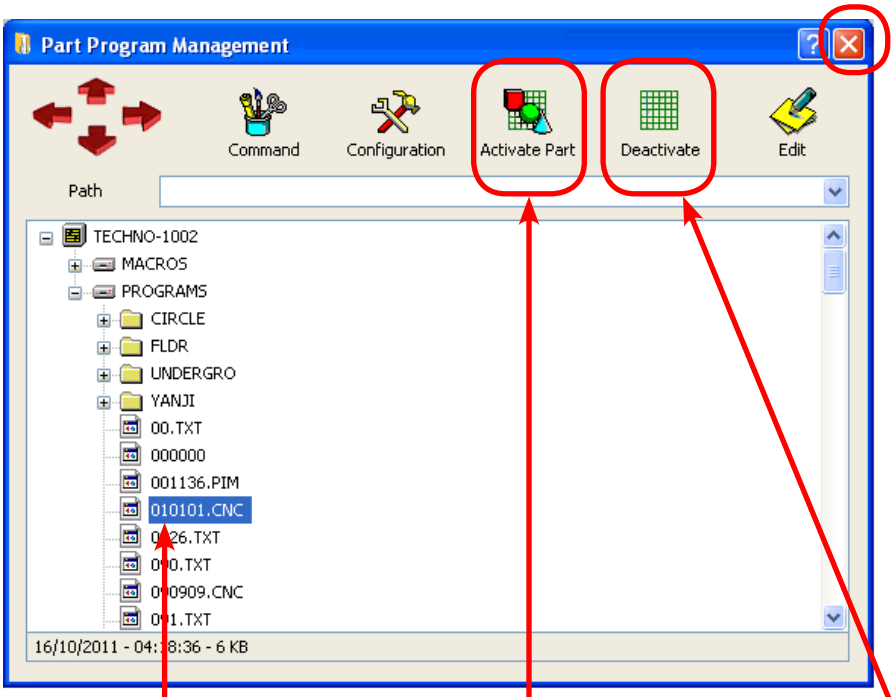

2

Locate the File you want to load.
Left click on the file.

- Click Activate to load it to the machine.
- Close the window by clicking X.

3

When loading a new file click Deactivate to remove the old file, before you click activate.

(Continued on next page)

3.5 Running a G-Code File (Continued)

The file name will now appear on the top right of the screen. You are now ready to run the file.

To run the file.
-Ensure that the Origin and the Tool offsets are set.
-Check AUTO to run in Continuous mode.
-Click CYCLE START to run the file.
The cut speed and spindle speed can be adjusted by pressing the (+) or (-) blue box under cut speed.

The file will now run.
- Pressing HOLD will pause the machine.
- Pressing CYCLE START will continue the file.

DO NOT JOG OFF THE PART WHILE IN HOLD. If you do, you will need to use the return to profile function to return to continue the file.
See advanced tutorials to learn how to do this.

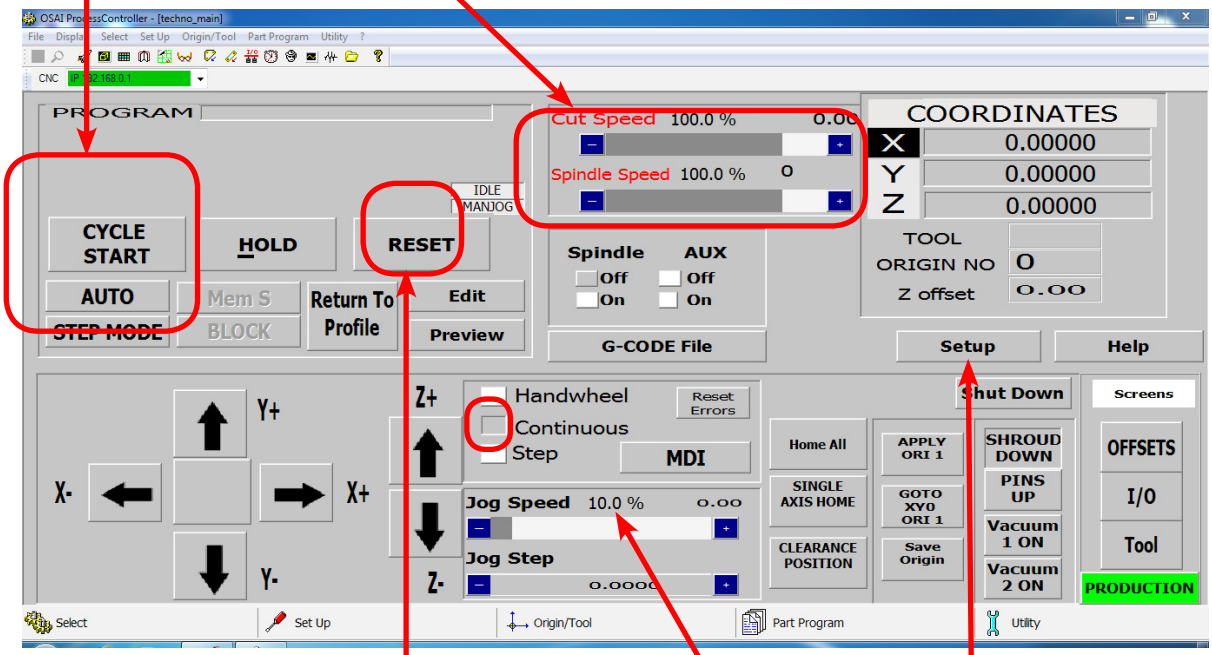

RESET will stop the file and reset offsets and the origins.

To Override speeds, click on Setup and select Feedrate Bypass.
The Cut speed will now be determined by the Percentage of the maximum jog speed.

3.6 Machine Origin, Working Origin and Offsets

Machine Origin:

When the machine goes to the home position, the coordinate system is set to zero.
This is the machine origin.

Machine origin is a reference position from which Tool locations, lengths and saved offsets can be recalled. Machine origin is always located in the bottom left corner of the machine.

Once the machine has been homed, machine origin is no longer a concern for the user.

Working Origin:

Working origin, also called Origin, or XYZ zero position, is the coordinate system the part to be cut exists in.
Working origin can be saved by the user anywhere on the table.

If the working origin is set too close to the gantry, and the G-code file has positions beyond the size of the table, an error message will be produced stating that an over travel limit has been reached.

Use the Save Origin button to save an origin.

Offsets:

Offsets are just another name for a saved Working Origin. Different offsets can be saved using the Save Origin function, but instead of naming the offset 1, pick a different number.

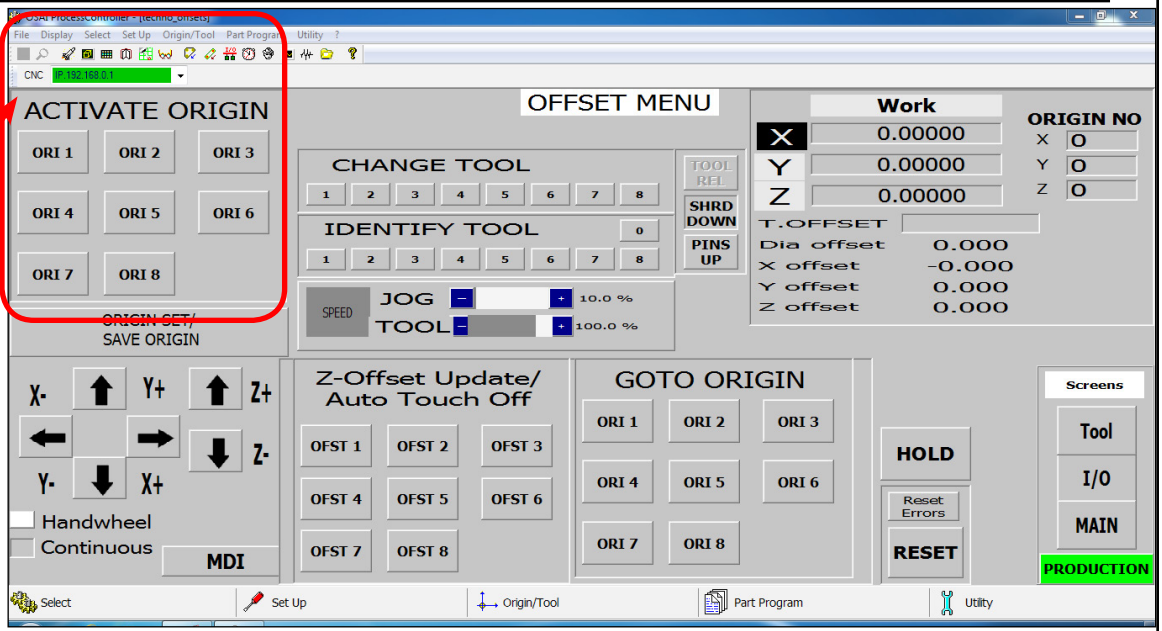

Offsets can be activated in the interface by clicking ACTIVATE ORIGIN in the Offset Menu and in the G-code by using the function : (UAO,0#) Where # is the offset number.

SECTION IV: Advanced Tutorials

4.1 Using Block to Block Functions

Block to block function will allow a particular section of a G-code file to be run. For this function to operate, the G-code file must have line numbers in the following manner:
N100 G0X35Y10
N101 G1X35Y0
etc
When Block to Block is clicked, the user will be asked to enter the Starting block Number and the ending block number.
Once the blocks are selected, click OK

Pressing CYCLE START will run the section of G-code file selected.

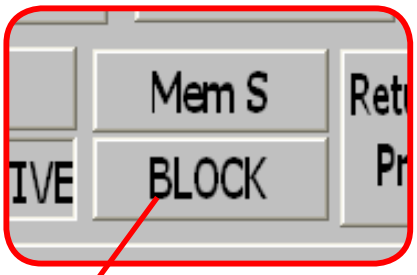

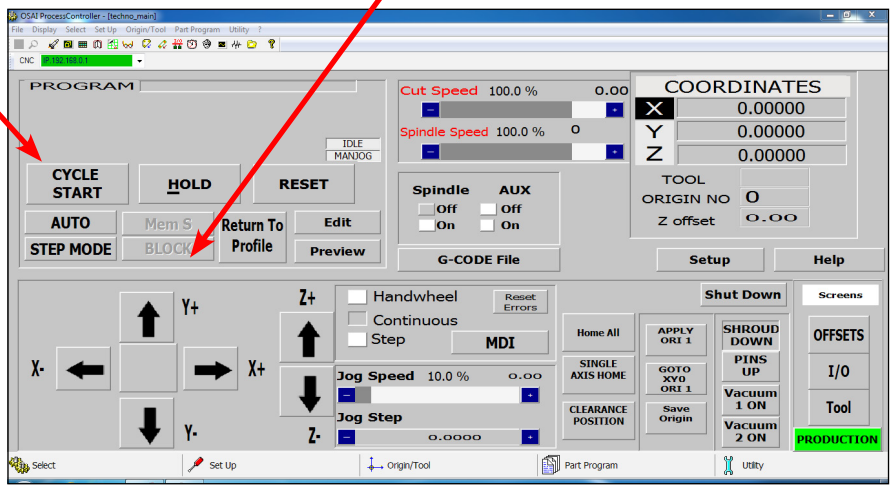

NOTE: Running a file from block to block will ignore all other parts of the file.

This means a spindle on command, Tool change and origin must be called at the start of the block if a part is to be cut.

This information can be manually entered in a text editor.

4.2 Mem Search

Mem search will allow you to find the last reset point in the file currently activated.

If you press RESET while running a file, you can continue from that point by pressing MEM S.

The G-code will be searched for the last break point, and once it has been found, pressing CYCLE START will continue from that point.

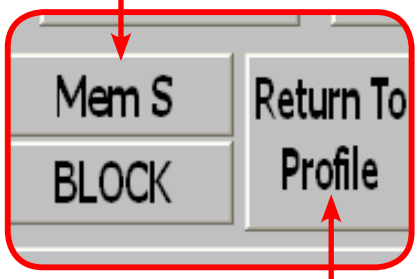

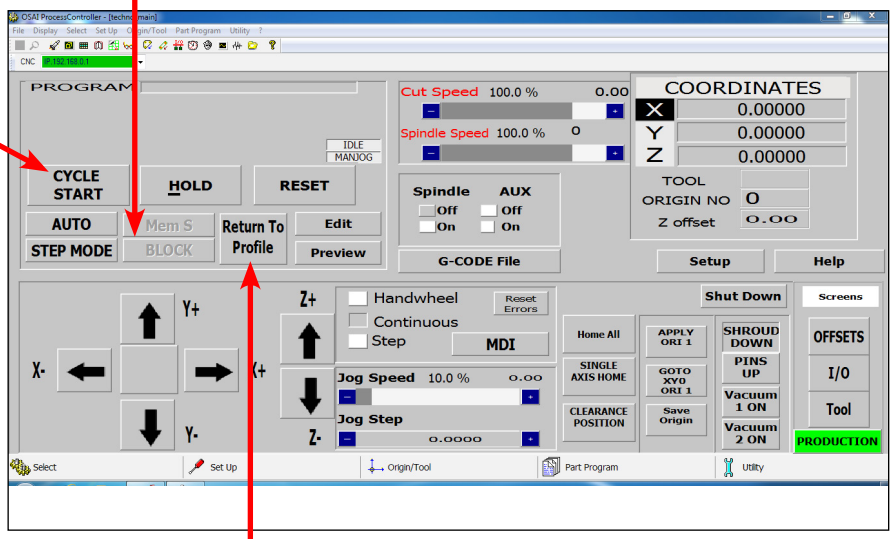

4.3 Return to Profile.

If the user presses HOLD while a file is running and jogs off the part, when they try to restart, a "Not on part profile error" will appear.

To return to the part profile:
- Press Return to Profile.
- Press the Y axis arrow, the Y axis will move to the position it was in when hold was pressed.
- Press the X axis arrow, the X-axis will move to the position it was in when hold was pressed.
- Press the Z axis arrow, the Z-axis will move to the position it was in when hold was pressed.
- "Spindle on Part Profile" message will appear on the screen.
- Deactivate hold, by clicking HOLD.
- Select AUTO.
- Click CYCLE START to continue the file.

4.4. Setup Parameters

Certain parameters for a G-code file can be changed from the Setup window in the interface. Any changes here are cleared when RESET

Click on Setup and the drop down menu will appear.

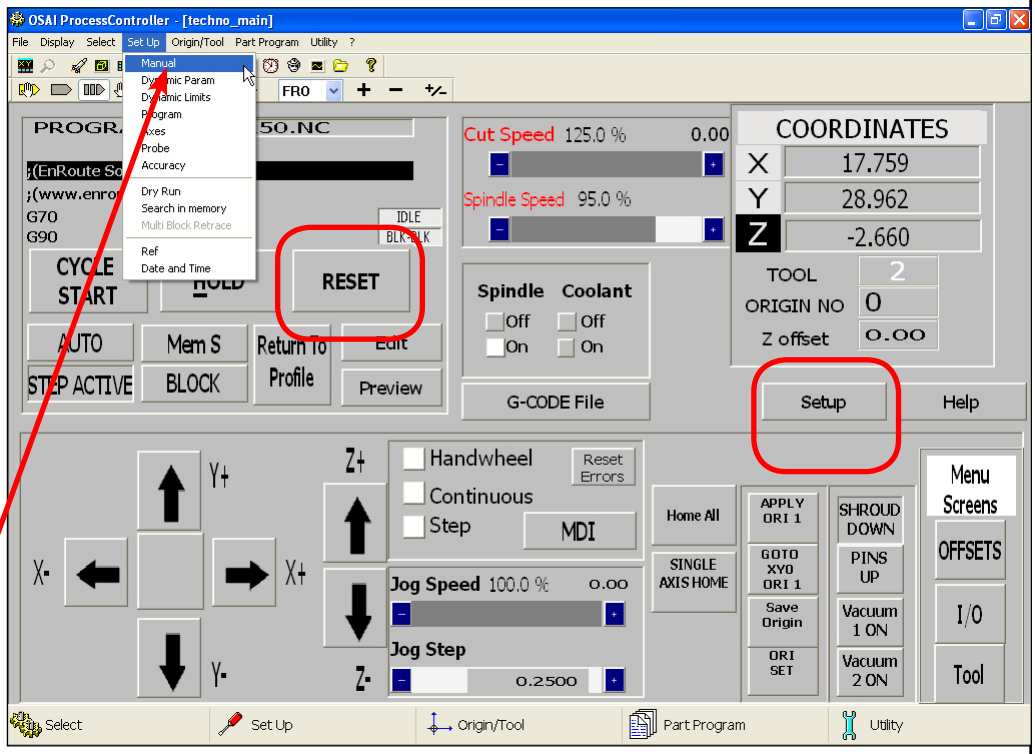

Manual Setup will allow the user to change the Jog step size.
Checking Auto will mean the machine will jog the full step size when the jog arrow is pressed once.

Checking Manual will mean the machine will only jog while the arrow is held down. When it reaches the step size, it will stop and the user will have to release the button and press again.

All the other options on this window are disabled.

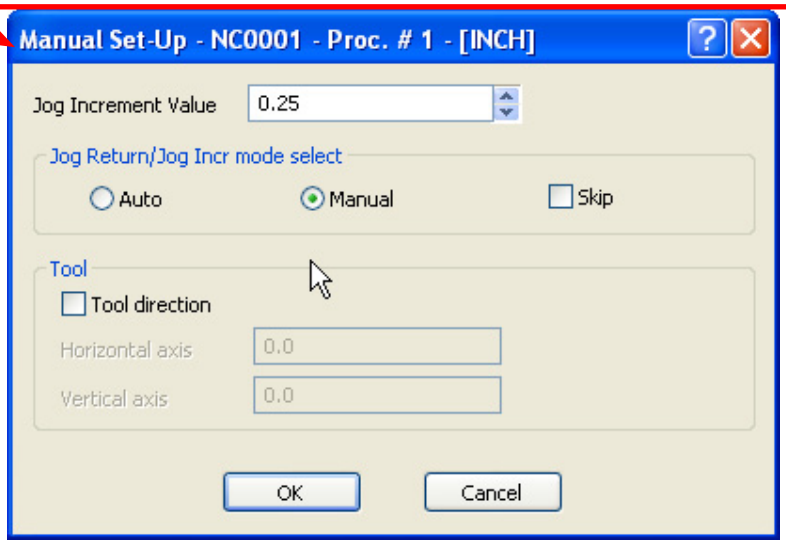

Dynamic Parameters will allow adjustment in canned drilling cycles.

See the Osai G-code manual for more details on canned cycles.

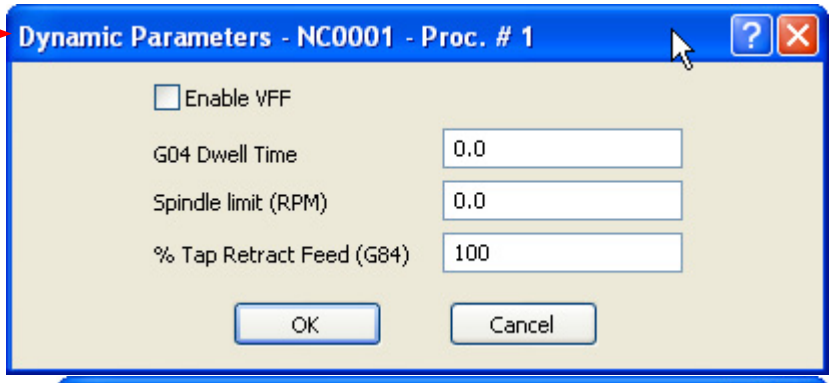

Dynamic Limits will effect the smoothness of the machine.

See the Osai Amp manual for more details on these values.

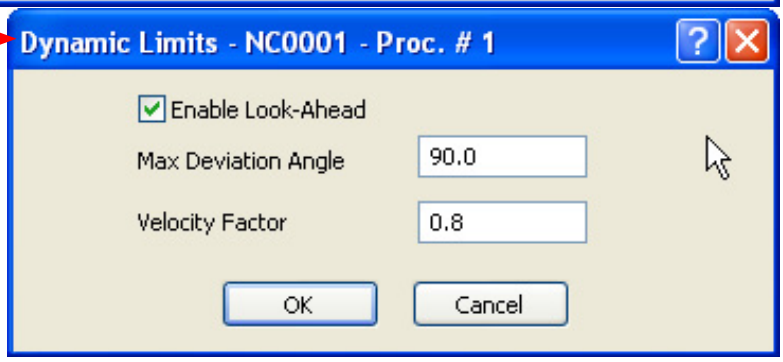

Program Setup will allow adjustments to the G-code file.

- Block delete will delete a highlighted part of a G-code file.

- Feedrate bypass will override the programmed feedrates and use the percentage feed on the main screen.

- Disable program scroll will stop every line of G-code appearing on the screen.

- Optional stop will disable any M01 commands in the G-code file.

- Rapid override control will allow speed to be overridden when the file is running.

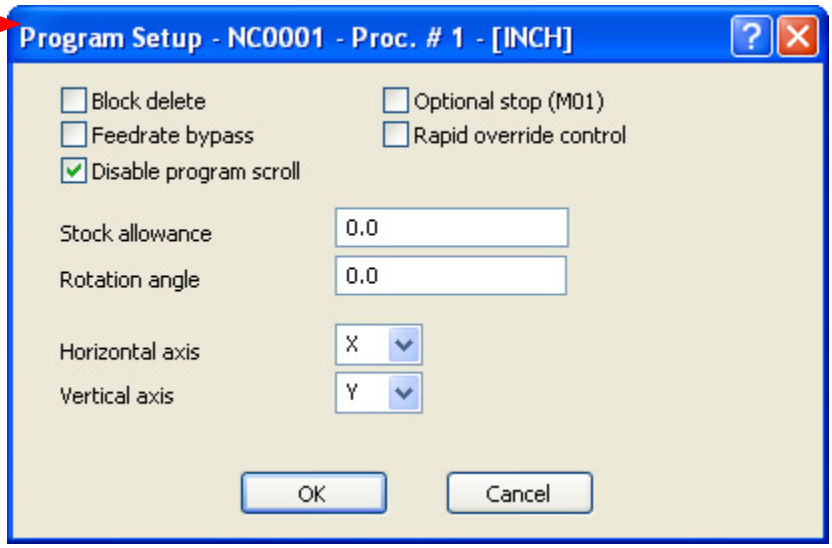

Probe Setup controls the way the tool offsets are learned and should not be

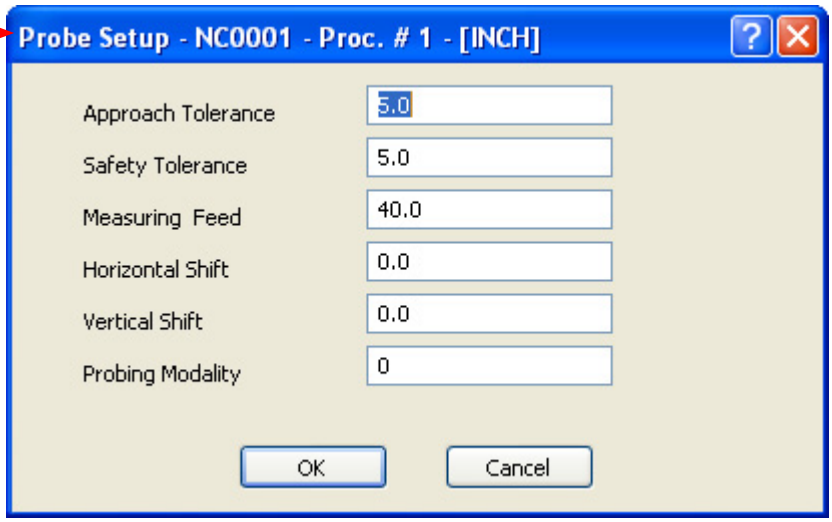

Set Accuracy will adjust the arc tolerance for circles and curves in the file.

See the Osai Amp and Osai G-code manual for more information

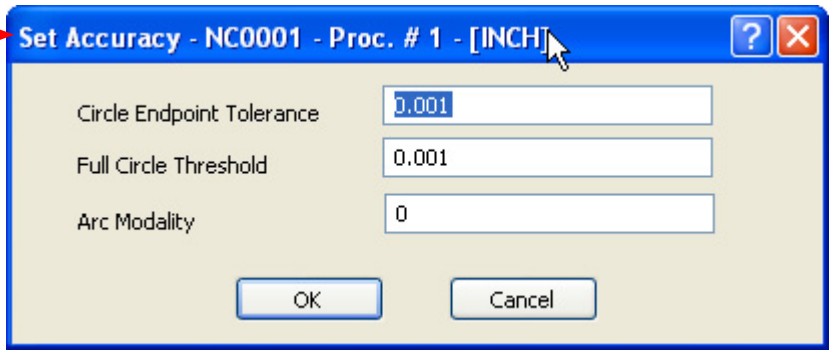

4.5 Backing Up Parameters.

The parameters of the Amp and PLC should be backed up before any adjustments are made to them.

Restart the controller in Setup Mode.
Select Boot, then Restart, then pick Setup from the Mode menu.

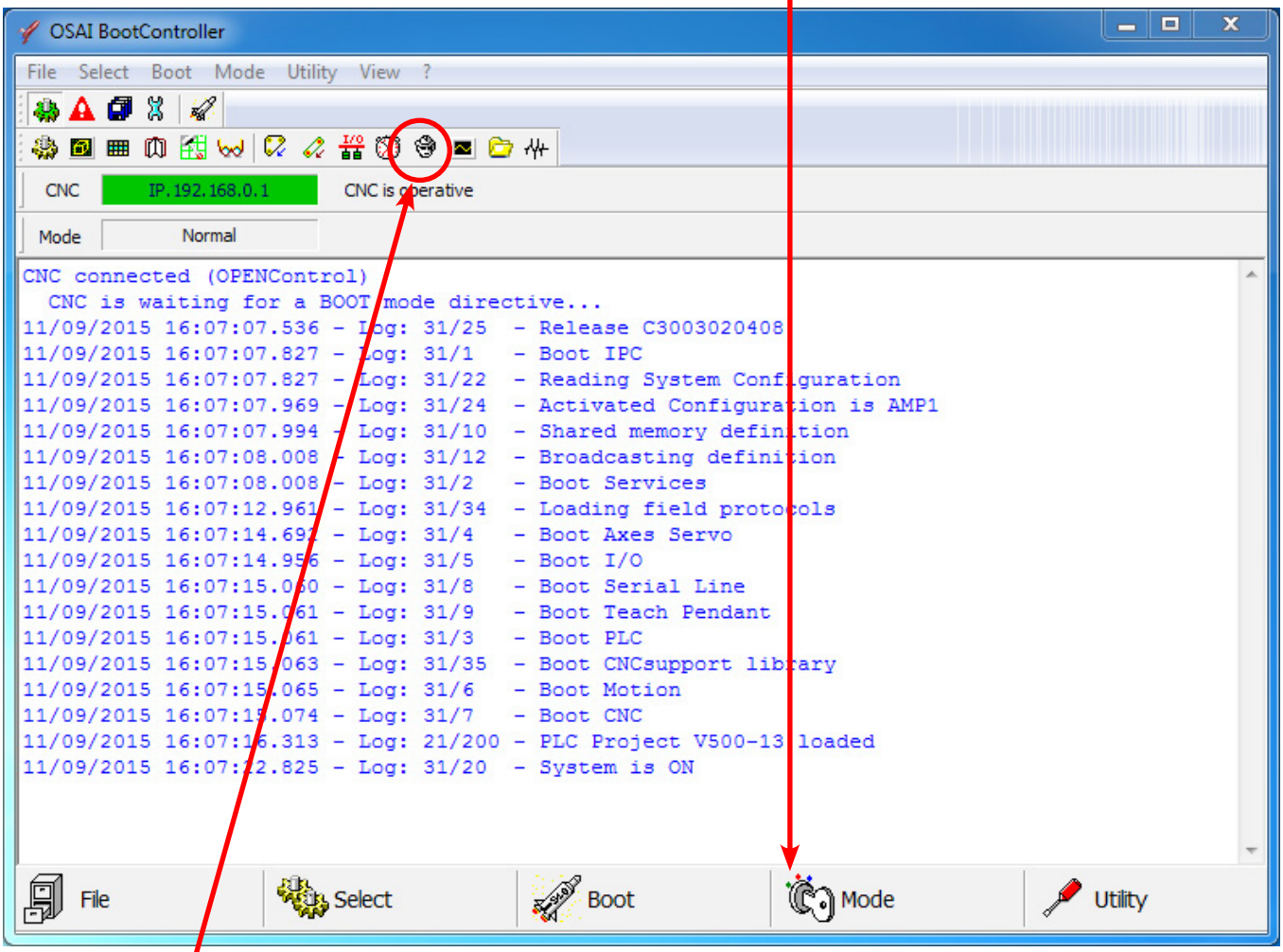

Once in Setup Mode, click on the Security Icon to enter the security window.

Click on Backup to select the backup option

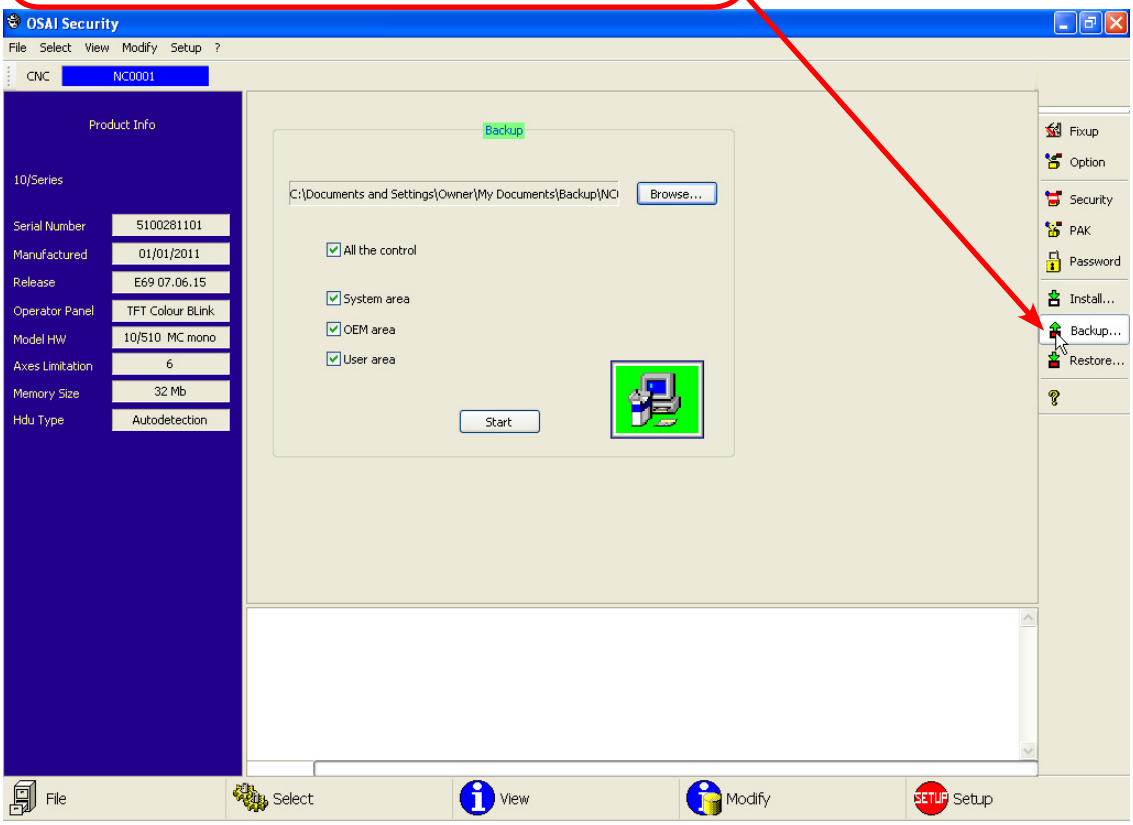

Click on Browse and pick / create a suitable folder to save the backup, enter a suitable file name for the backup and click Save.

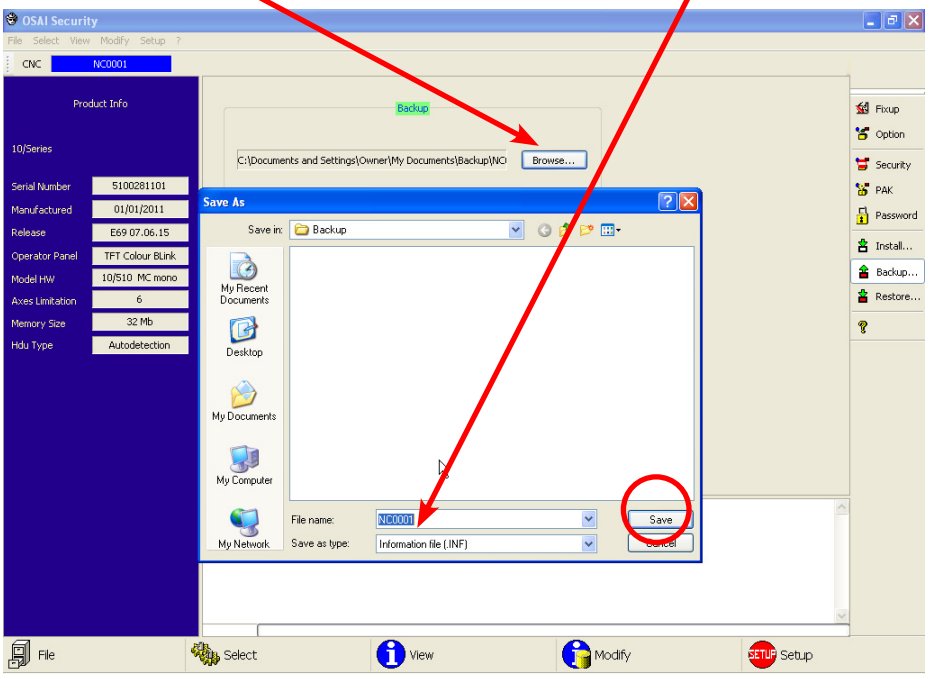

Check the box beside All the control and click Start to begin the backup.

Once complete, close the Security window, and reboot the controller in Normal mode.

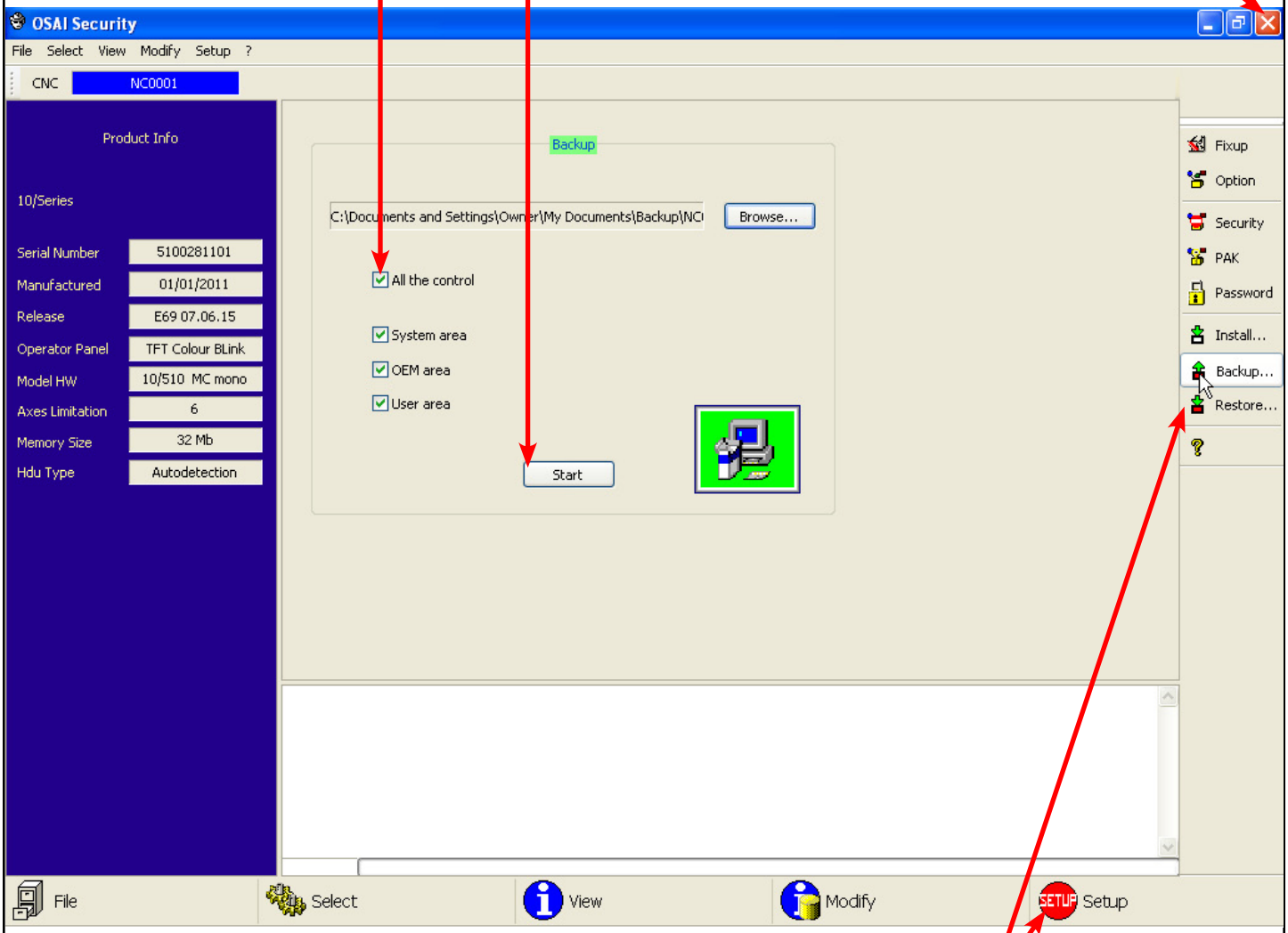

To Restore a saved backup, just reboot in setup mode again, and select Restore to load the saved settings.

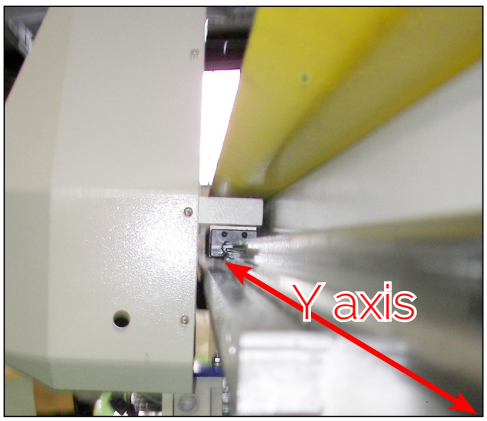

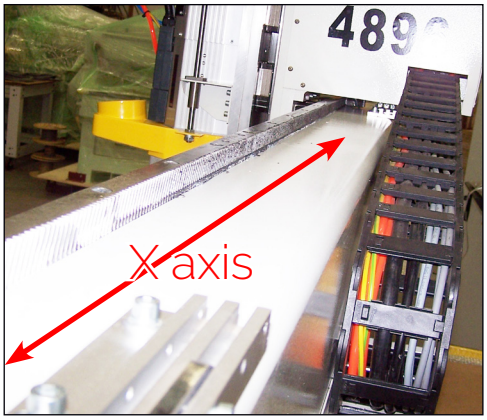

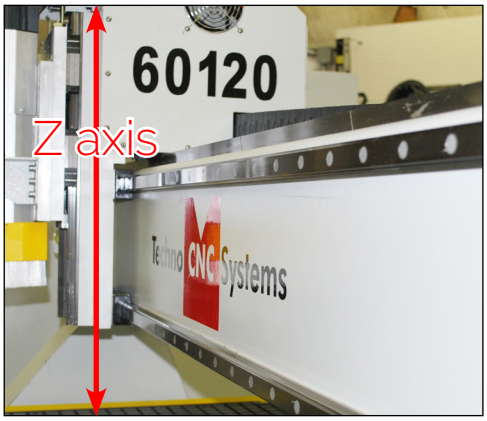

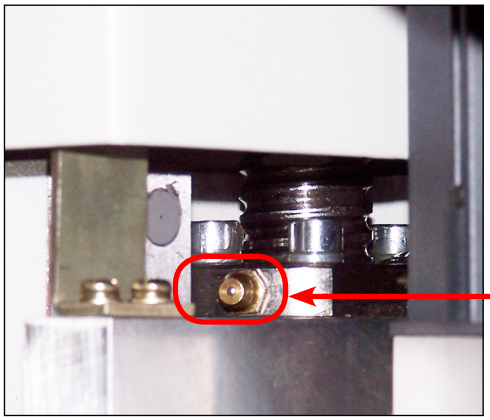

V. Machine Lubrication

5.1 Lubricating the X-Y Rack and Pinion.
Lubrication is important with rack and pinion gearing systems. A thin film of grease should always be present on the contacting tooth flanks to minimize metal to metal contact. Lithium grease lubrication is recommended over oil, as the oil lubrication will flow away from tooth flanks. The racks should be cleaned with a degreasing agent and fresh clean grease should be applied at regular intervals depending on the usage of the machine. It is recommended that this is done every 80 hours of machine usage. Use a small brush to coat both racks on the side of the Y axis and the single rack across the X axis.

5.2 Lubricating the X-Y-Z Rails
The rail carriage bearings are sealed and protected with wipers. The rails should be lightly oiled to allow smooth operation. Avoid a build up of debris on the rails by blowing them off with air or wiping them down with a rag. The rails do not need to be lubricated as often as the rack. Once a month should be sufficient.

Recommended Lubricants.
* Some machines have zerk fitting for rail carriage bearings, while some machines do not!
Lithium Based Grease:
- Alvania Grease No. 2(Shell) or Equivalent.
- Techno Part No. H90Z00-8670T8

Oil:
- Vactra No. 2s(mobile)
- Tonner Oil or Equivalent.
- Techno Part No. H90200-LUBE002

Oil and Grease Kit:
- Techno Part No. H90Z00-LUBEKIT2

NOTE: AVOID A BUILD UP OF DEBRIS ON MOVING PARTS. CLEAN OFF ANY DEBRIS TO AVOID DAMAGING THE MACHINE.
5.3 Lubricating Z Ballscrew
The Z axis uses a ballscrew and ballnut instead of a rack and pinion.

Lithium grease is pumped into the lubrication points

Section VI: Appendix

HSD Aggregate Tool

Please follow these instructions carefully to properly install the HSD aggregate on your machine.

(Diagram 1. The pin must be in this position in the tool holder.)

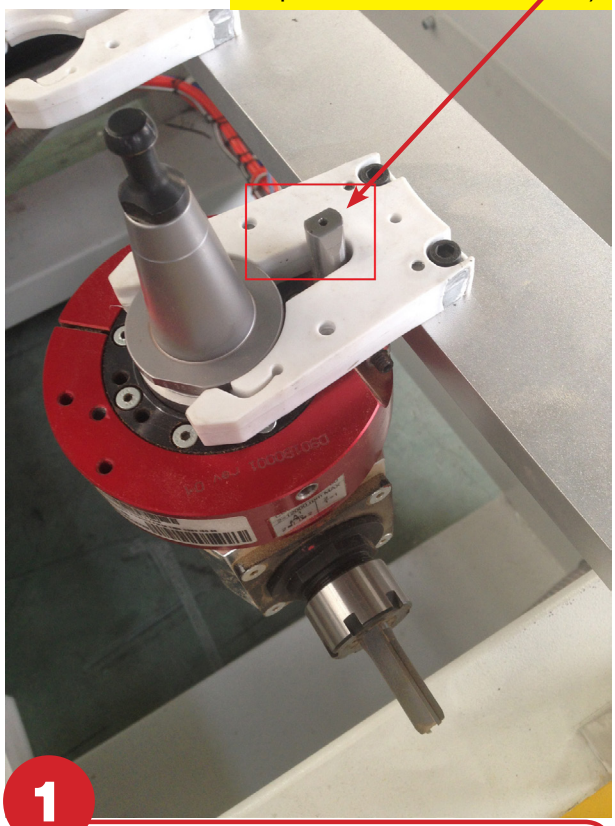

1

Diagram 1 illustrates how the aggregate must be seated in the ISO30 tool clip.

(Diagram 2. The current aggregate angle.)

2

Diagrams 2 and 3 illustrate how to adjust the angle of the aggregate cutting tools.

It is essential that the pin (shown in Diagram 1) remains in the shown position so that it aligns with the aggregate tool ring and ISO30 tool clip.

3

(Diagram 3. Loosen these screws to adjust the aggregate angle.)

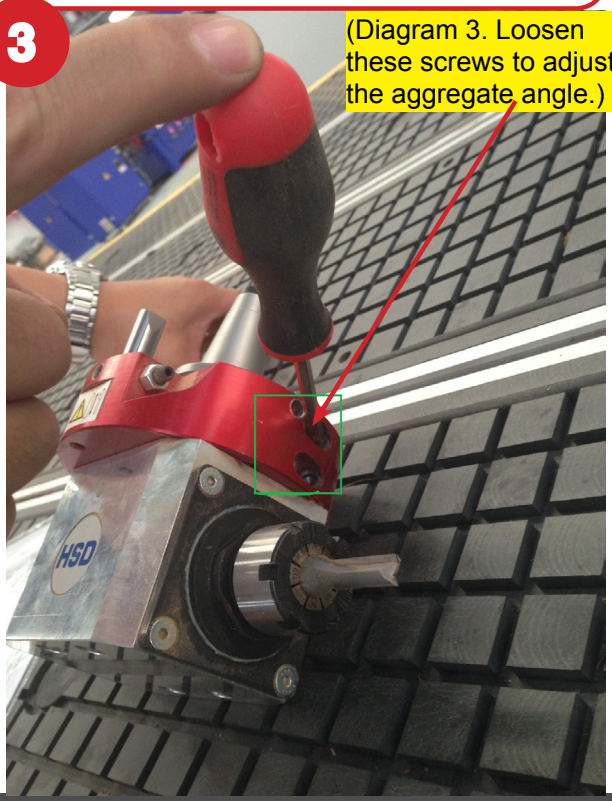

How to Set Up Tool Offsets with Aggregate Tools

1 Click “Utility.”

2 Click “Table Editor.”

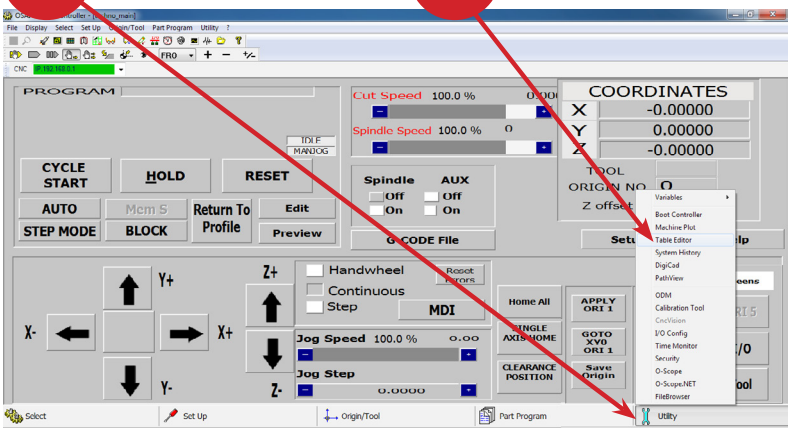

Click here for tool lengths.

Click here for English units.

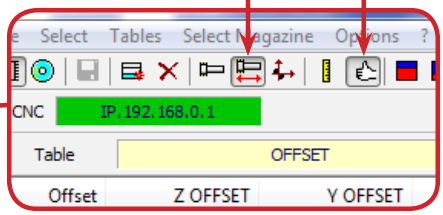

3 In the offset screen, you will enter the following values for the aggregate offset.

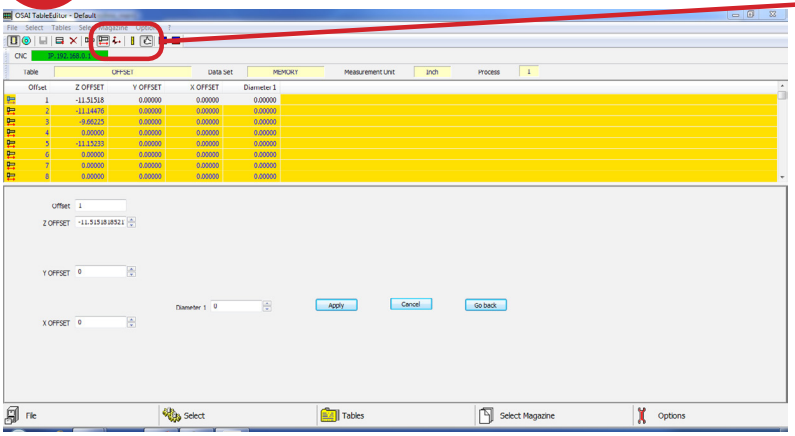

4 Please see the following Example:

X Tool Offset = Total Length – 3.4843" (88.5 mm)

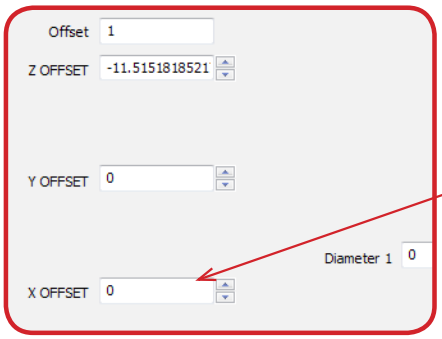

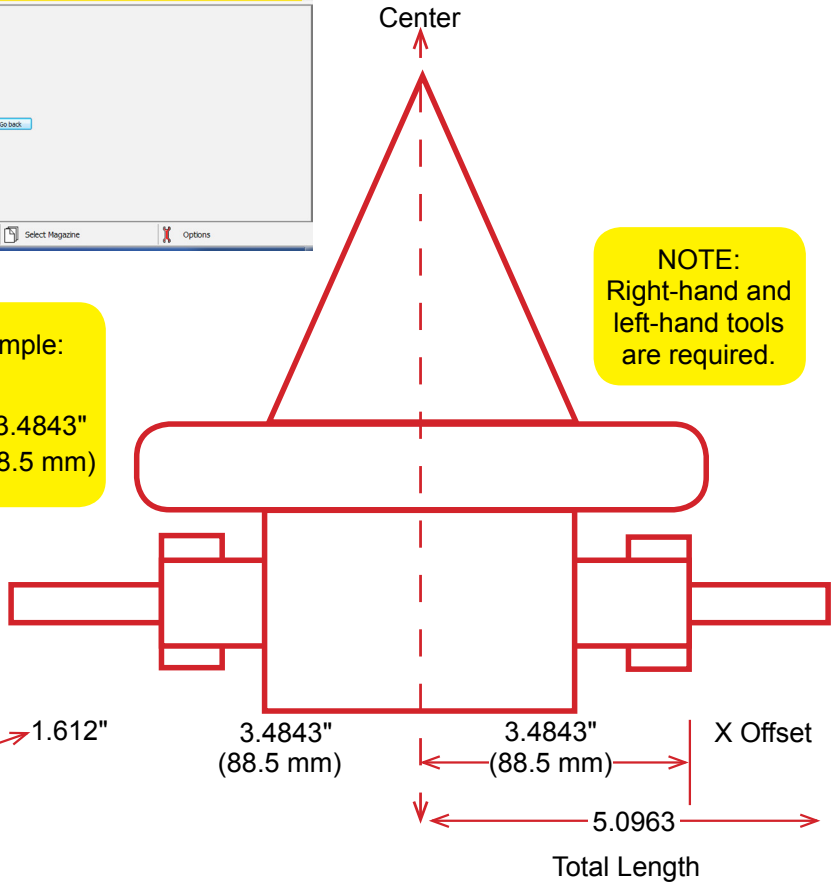

NOTE: Right-hand and left-hand tools are required.

6.1 Service and Maintenance

Caution

(1) Maintenance shall be performed by qualified personnel.

(2) Switch off the main power supply before servicing. If power supply is needed, have qualified personnel operate it.

(3) Use genuine replacement parts and components.

Linear drive component Maintenance

Wipe the linear rails and bearings once a day to assure smooth play free motion.

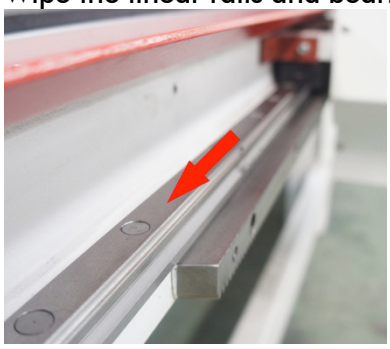

Lubricate the rack and pinion and the ball screw drive once every week so as to ensure longer service life.

When lubricating the z-axis screw, use a grease gun to inject grease into zerk fitting. It is recommended to use Kluber TA 15/2 or PETAMOGY 193 or equivalent.

Electrical Cabinet Maintenance

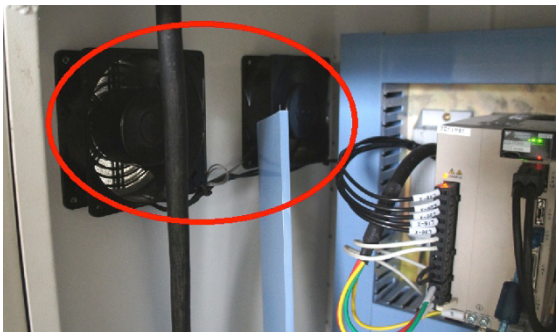

Caution:

Switch off the main power supply before servicing. If power supply needed, qualified personnel shall operate it.

(1) Clean the cabinet with dust collector once every week. Be careful not to damage or loosen any wire connections. Compressed air may be used but from at least 4 foot distance.
(2) Check the fan filters every month. Clean and / or replace if necessary.

Maintenance Intervals on Becker VTLF 250 Series Pumps

Every 50 Hours

-Check to make sure the pump is free of any debris or materials leaning against the pump. 18" perimeter clearance is required for proper ventilation.
-Check and clean air intake filters. Replace if Necessary.
-Clean more often in dirty environments.

9 months to Yearly or after 4,000 hours

*Check Vanes for **minimum width (41 mm).** Replace if necessary.
*Inspect vanes for improper wear (cupping). Replace if necessary.
*Inspect teflon tube seals in end shield.
If the hollow center shows through, replace them.
*Wipe grease off rotor shaft before re-installing the end shield.
***Grease bearings,* Use only Amblygon TA 15/2 Grease,**
6 or 7 pumps of the grease gun per fitting. DO NOT OVER GREASE

Every 3000 to 4000 Hours

*Inspect motor coupling. Replace if necessary.

Spindle Safety Instructions

NOTE: Refer to spindle manufactures manual for more detailed information. Below is basic tooling maintenance.
Use ISO 30 tool holder

1) Warm up spindle each day before use. See spindle manual for details.
2) Use original tool holders only.
3) The tool holder must be in the upright position during tool changing.
4) Air pressure needs to be 85-100 PSI during tool changing. NOTE: For best operation and spindle longevity it is recommended to have a clean drive non fluctuation air source. Air dryer recommended.
5) Clear the dust in the spindle regularly.
6) Keep the tools sharp and clean. The workpiece needs to be secured tightly on the table otherwise work piece can become loose and create tool vibration.
7) Change the filter in the oil-water separator on a monthly basis. Empty the water every 8 hours. Blow air into the middle hole and make sure there is no oil. Warning: water and oil in the air lines can damage the spindles moving parts.
8) The air needs to be filtered to be free of moisture, oil mist and dust before entering the spindle.
9) ISO30 tool holders and collets should be cleaned weekly. It is recommended to use a rust prohibitor. (Techno p/n: H25XOS-33-21)

Other maintenance

To ensure longer service life, perform regular maintenance of the parts and components:
(1) Check the overtravel limit switches (both software limit switch and mechanical stops) regularly. Do not let rust accumulate on the limit switches as it seriously affects their

sensitiveness and may fail to give alarm when the machine over travels, which could lead to mechanical crash and damage to the machine. The way to check is to press the switch with hand and see if it gives off alarm. You can also check if the I/O port input signal changes.

(2) Regularly check the electrical parts. Make sure the plug in devices, cables and cords are well connected. Keep the cabinet door closed when in operation. Opening the cabinet door will not help it cool down. Regularly check and clean the fans and filter nets to ensure proper ventilation.

(3) You are encouraged to utilize the machine and do not let it stay idle for long, especially in the first year. The more you use the machine, the more likely the machine will be in good condition in the future. If the machine stays idle for too long, the electrical parts are exposed to moisture, heat, etc., thus reducing the service life of the machine. Make sure to power up the machine from time to time (at least once a month). Perform regular check and maintenance. Run the machine for one hour each time and the heat generated will help reduce the humidity. This will also help you to find problems with the machine in advance.

Appendix I Daily Maintenance Sheet

No.	Cycle	Part	Requirement
1	Everyday	Table	Sweep clean the table every day. Keep the machine clean and free of other objects.
2	Everyday	Switch	Check and clean all the limit switches.
3	Everyday	Screw	Check the lubricator every day and ensure timely refill.
4	Everyday	Spindle	Check every day to ensure there is enough water in the water tank used for spindle cooling and whether that water tank is functioning.
5	Everyday	Tool	Check each of the tools is in correct position.
6	Everyday	Air compressor	Make sure the air compressor has the right air pressure.
7	Everyday	Water separator and dry	Make sure the filter cup of the water separator and dryer is dry.
8	Everyday	Linear guide	Wipe clean the linear guides and check if they have any scratches or damages.
9	Everyday	Protective cover	Make sure the protective covers on the machines are all intact.
10	Everyday	Cooling fan	Make sure the fan in the electrical cabinet is working and there is no clogging in the air filter net. Clean the filter regularly.
11	Everyday	Others	Make sure the spindle, tool holders and other accessories are in working condition.
12	Regularly	Oiler and oil gun	Replace the liquid when necessary.
13	Monthly	Electrical cabinet	Sweep clean the electrical cabinet when necessary.
14	Monthly	Filter	Clean the filter net regularly, replace with a new one when necessary.
15	Monthly	Wirings and connections	Make sure the wirings and connections are correct.
16	Monthly	Cables, cords and terminals	Check all the cables, cords and terminals are in correct working condition.
17	Semi-annual	Electrical parts	Check if the electrical parts are making strange noises. If they do, replace them.
18	Semi-annual	Backlash	Measure the backlash on all axes every half year. If you find any deviation, make sure to adjust or make compensation.
19	Semi-annual	Electrical parts	Check all the electrical parts and relays to make sure they are working.
20	Semi-annual	Machine bed	Make sure the whole machine is still properly balanced after 6 months of service. If not, adjust the iron pads and tighten the screws.

6.2 Common Problems | Error Messages | Solutions

Problem	Solution
Machine freezes during tool change, or when it tries to do a tool change in a G-code file.	This error can occur if the pneumatic sensor on the dust shroud is faulty. To check this: • Press dust Shroud UP on the main screen. • Look at the sensor on the piston; it should be red when the shroud is up. • If not, move the sensor around the cylinder until the light comes on. • If the light will not come on, it will need to be replaced.
Syntax Error when loading a G-code file	There is an unrecognized command in the G-code file. Use the correct Techno post in the CAM package and output the file again.

Error Message	Problem	Solution
001 EMERGENCY STOP ACTIVE	E-stop pushed in.	Release E-stop, and click E-stop release on screen.
010 CAUTION! OVERTRAVEL LIMIT ACTIVE	G-code file will go beyond the table size if run.	Adjust working origin. Redo G-code file to correct size.
011 AXES NOT REFERENCED	Machine has not been homed.	Press Home All on screen.
013 MPG ENABLED	Handwheel is active.	Click on Auto or Continuous to deactivate handwheel
034 AXIS DRIVES FAULT	One of the axis amps shut down.	Cycle power on and off to reset amp. Check cables going to Amp.
041 SPINDLE INVERTER 1 FAULT	Spindle had a fault and shut down.	Cycle power on and off to restart inverter.

Error Message	Problem	Solution.
NC030 Circle is not Congruent. Dynamic mode not Congruent.	G-code file has an incorrect arc	Arcs must be absolute i's and j's, or created using R. select one of these options in the CAM post processor.
NC101 Process 1 Positive over Travel	The G-code file is trying to run beyond the table size.	Adjust Origin. Redo G-code File.
NC123 Bad Cycle Mode	Tried to press Cycle start to run file.	Hold is active, press Hold to release, select Auto, press Cycle Start.

Appendix II Common Errors and Solutions

Driver Error Codes

Display	Description	32bit-ErrorCode (16bit-ErrorCode + 16bit-Additional Info)
AL001	Overcurrent	2310-0001$_h$
AL002	Overvoltage	3110-0002$_h$
AL003	Undervoltage	3120-0003$_h$
AL004	Motor error	7122-0004$_h$
AL005	Regeneration error	3210-0005$_h$
AL006	Overload	3230-0006$_h$
AL007	Overspeed	8400-0007$_h$
AL008	Abnormal pulse control command	8600-0008$_h$
AL009	Excessive deviation	8611-0009$_h$
AL010	Reserved	0000-0010$_h$
AL011	Encoder error	7305-0011$_h$
AL012	Adjustment error	6320-0012$_h$
AL013	Emergency stop activated	5441-0013$_h$
AL014	Reverse limit switch error	5443-0014$_h$
AL015	Forward limit switch error	5442-0015$_h$
AL016	IGBT temperature error	4210-0016$_h$
AL017	Memory error	5330-0017$_h$
AL018	Encoder output error	7306-0018$_h$
AL019	Serial communication error	7510-0019$_h$
AL020	Serial communication time out	7520-0020$_h$
AL021	Reserved	Reserved
AL022	Input power phase loss	3130-0022$_h$
AL023	Pre-overload warning	3231-0023$_h$
AL024	Encoder initial magnetic field error	7305-0024$_h$
AL025	Encoder internal error	7305-0025$_h$
AL026	Encoder internal error	7305-0026$_h$

List of Alarms for VFD

Fault Name	Fault Descriptions	Corrective Actions
oc	**Over current** Abnormal increase in current.	1. Check if motor power corresponds with the AC motor drive output power. 2. Check the wiring connections to U, V, W for possible short circuits. 3. Check the wiring connections between the AC motor drive and motor for possible short circuits, also to ground. 4. Check for loose contacts between AC motor drive and motor. 5. Increase the Acceleration Time. 6. Check for possible excessive loading conditions at the motor. 7. If there are still any abnormal conditions when operating the AC motor drive after a short-circuit is removed and the other points above are checked, it should be sent back to manufacturer.
occ	**IGBT protection** (Insulated Gate Bipolar Transistor)	
ou	**Over voltage** The DC bus voltage has exceeded its maximum allowable value.	1. Check if the input voltage falls within the rated AC motor drive input voltage range. 2. Check for possible voltage transients. 3. DC-bus over-voltage may also be caused by motor regeneration. Either increase the Decel. Time or add an optional brake resistor (and brake unit). 4. Check whether the required braking power is within the specified limits.

Fault Name	Fault Descriptions	Corrective Actions
oH	**Overheating** Heat sink temperature too high	1. Ensure that the ambient temperature falls within the specified temperature range. 2. Make sure that the ventilation holes are not obstructed. 3. Remove any foreign objects from the heatsinks and check for possible dirty heat sink fins. 4. Check the fan and clean it. 5. Provide enough spacing for adequate ventilation.
Lu	**Low voltage** The AC motor drive detects that the DC bus voltage has fallen below its minimum value.	1. Check whether the input voltage falls within the AC motor drive rated input voltage range. 2. Check whether the motor has sudden load. 3. Check for correct wiring of input power to R-S-T (for 3-phase models) without phase loss.
oL	**Overload** The AC motor drive detects excessive drive output current. **NOTE: The AC motor drive can withstand up to 150% of the rated current for a maximum of 60 seconds.**	1. Check whether the motor is overloaded. 2. Reduce torque compensation setting in Pr.7-02. 3. Take the next higher power AC motor drive model.
oL1	**Overload 1** Internal electronic overload trip	1. Check for possible motor overload. 2. Check electronic thermal overload setting. 3. Use a higher power motor. 4. Reduce the current level so that the drive output current does not exceed the value set by the Motor Rated Current Pr.7-00.
oL2	**Overload 2** Motor overload.	1. Reduce the motor load. 2. Adjust the over-torque detection setting to an appropriate setting (Pr.06-03 to Pr.06-05).
HPF1	**GFF hardware error**	Return to the factory.
HPF2	**CC (current clamp)**	
HPF3	**OC hardware error**	
HPF4	**OV hardware error**	
cE-	**Communication Error**	1. Check the RS485 connection between the AC motor drive and RS485 master for loose wires and wiring to correct pins. 2. Check if the communication protocol, address, transmission speed, etc. are properly set. 3. Use the correct checksum calculation. 4. Please refer to group 9 in the chapter 5 for detail information.

Fault Name	Fault Descriptions	Corrective Actions
ocA	Over-current during acceleration	1. Short-circuit at motor output: Check for possible poor insulation at the output lines. 2. Torque boost too high: Decrease the torque compensation setting in Pr.7-02. 3. Acceleration Time too short: Increase the Acceleration Time. 4. AC motor drive output power is too small: Replace the AC motor drive with the next higher power model.
ocd	Over-current during deceleration	1. Short-circuit at motor output: Check for possible poor insulation at the output line. 2. Deceleration Time too short: Increase the Deceleration Time. 3. AC motor drive output power is too small: Replace the AC motor drive with the next higher power model.
ocn	Over-current during steady state operation	1. Short-circuit at motor output: Check for possible poor insulation at the output line. 2. Sudden increase in motor loading: Check for possible motor stall. 3. AC motor drive output power is too small: Replace the AC motor drive with the next higher power model.
EF	External Fault	1. Input EF (N.O.) on external terminal is closed to GND. Output U, V, W will be turned off. 2. Give RESET command after fault has been cleared.
EF1	Emergency stop	1. When the multi-function input terminals MI1 to MI6 are set to emergency stop (setting 19 or 20), the AC motor drive stops output U, V, W and the motor coasts to stop. 2. Press RESET after fault has been cleared.
cF1	Internal EEPROM can not be programmed.	Return to the factory.
cF2	Internal EEPROM can not be read.	Return to the factory.
cF33	U-phase error	Return to the factory.
cF34	V-phase error	
cF35	W-phase error	
cF36	OV or LV	
cF37	Current sensor error	
cF38	OH error	
CcodE	Software protection failure	Return to the factory.
PcodE	Password is locked.	Keypad will be locked. Turn the power ON after power OFF to re-enter the correct password. See Pr.00-07 and 00-08.
cFA	Auto accel/decel failure	1. Check if the motor is suitable for operation by AC motor drive. 2. Check if the regenerative energy is too large. 3. Load may have changed suddenly.

BECKER

Betriebsanleitung
Operating Instructions
Instructions de service
Istruzioni d'uso
Handleiding
Instrucciones para el manejo
Manual de instruções
Naudojimosi instrukcija
Kasutusjuhend
Lietošanas instrukcija
Οδηγίες χρήσης
取扱説明書
사용설명서

Driftsinstruks
Driftsinstruktioner
Käyttöohje
Driftsvejledning
Instrukcja obsługi
Kezelési útmutató
Návod k obsluze
Navodilo za uporabo
Návod na obsluhu
El Kitabi
Инструкция по эксплуатации
使用说明书

VTLF 2.200
VTLF 2.250

98/37 EG
2006/95 EG

DIN EN ISO 14001:2005
DIN EN ISO 9001
001929 QM

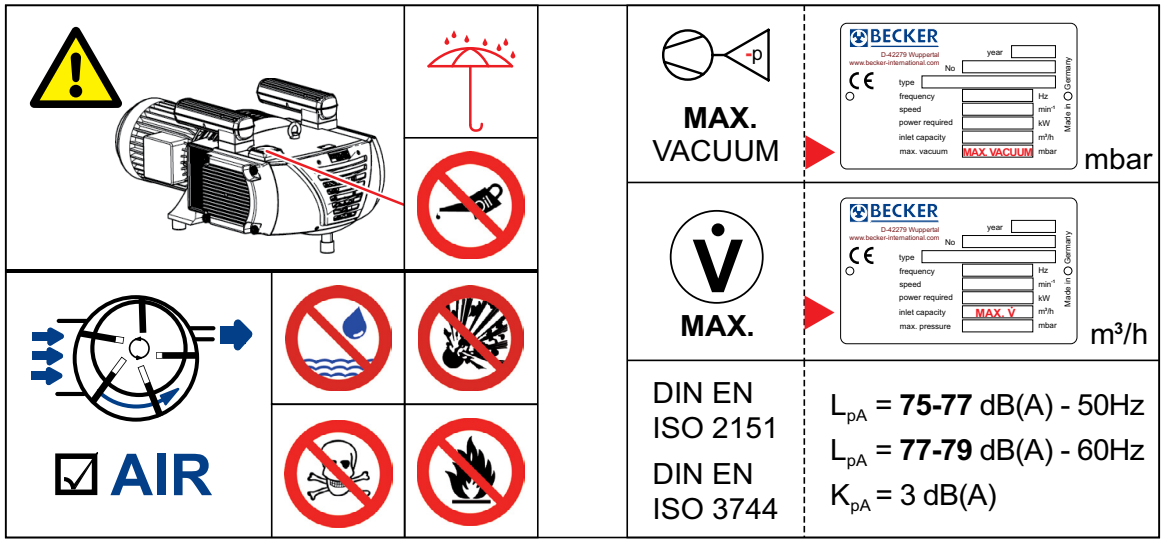

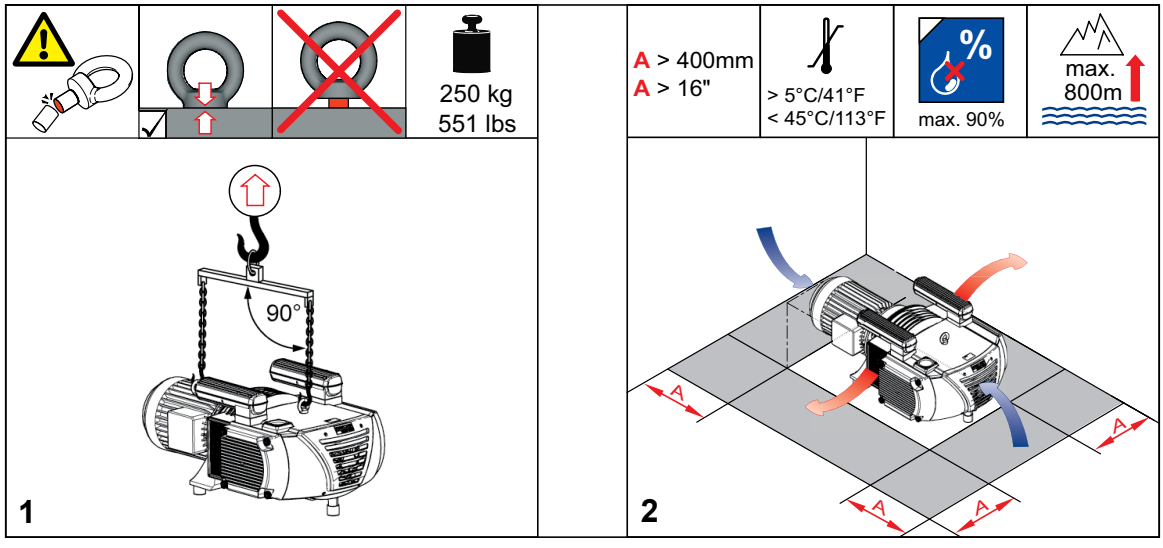

BPC 2810052202 04/09

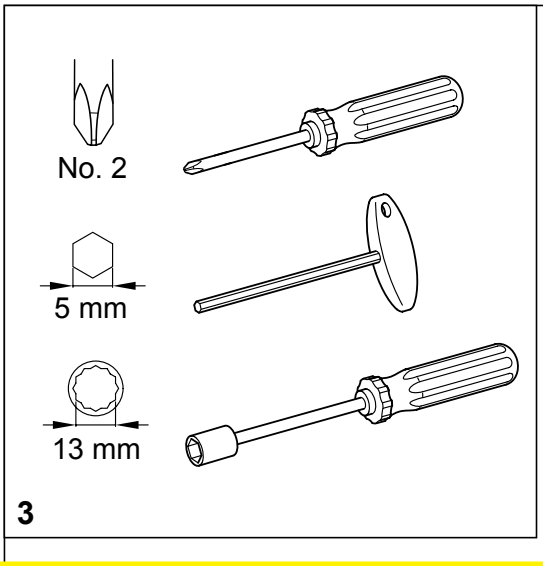
No. 2
5 mm
13 mm
3

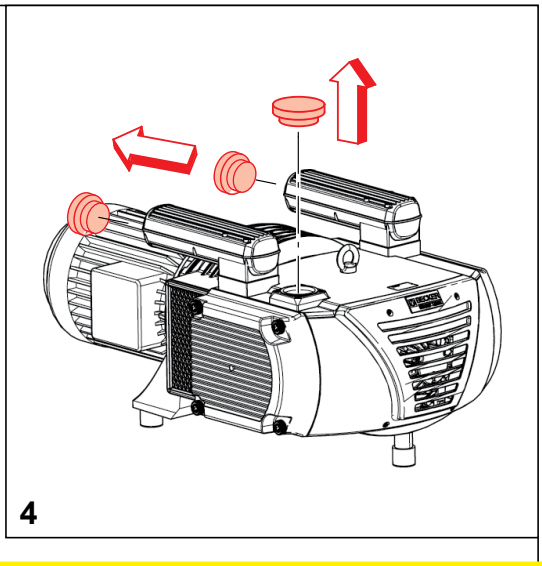
4

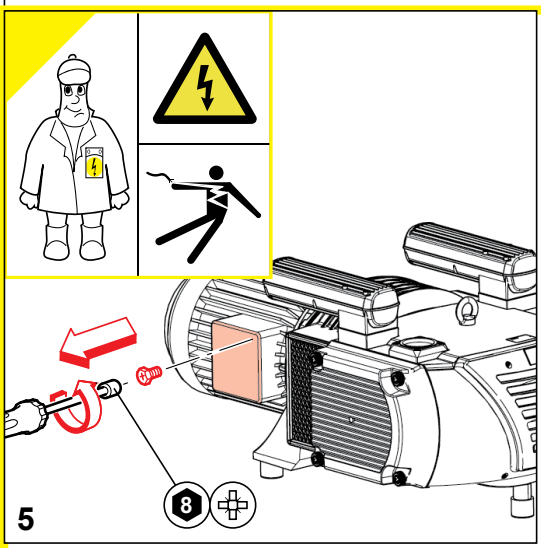
8
5

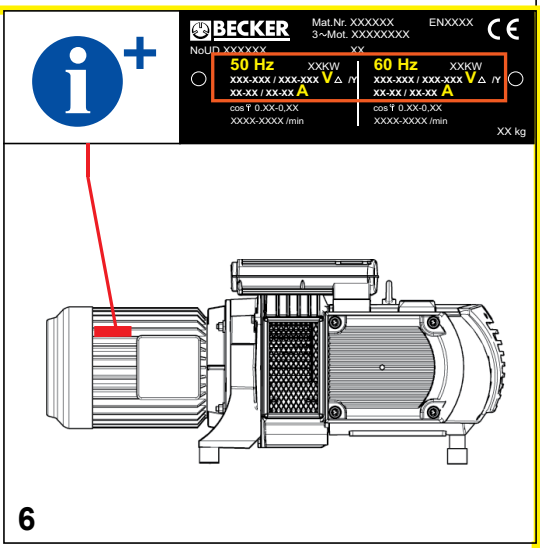
BECKER
Mat.Nr. XXXXXX
3~Mot. XXXXXXXX
ENXXXX
NoUP XXXXXX
XX
50 Hz
XXKW
XXX-XXX / XXX-XXX V
XX-XX / XX-XX A
60 Hz
XXKW
XXX-XXX / XXX-XXX V
XX-XX / XX-XX A
cos 0.XX-0,XX
XXXX-XXXX /min
XX kg
6

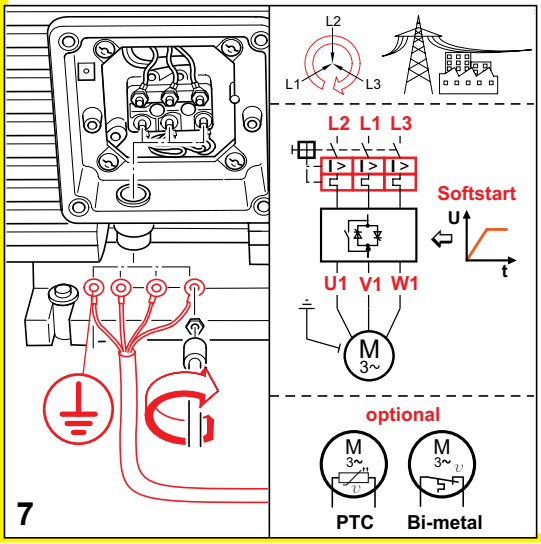
L2
L1
L3
L2 L1 L3
Softstart
U
t
U1 V1 W1
M
3~
optional
M
3~
PTC
M
3~
Bi-metal
7

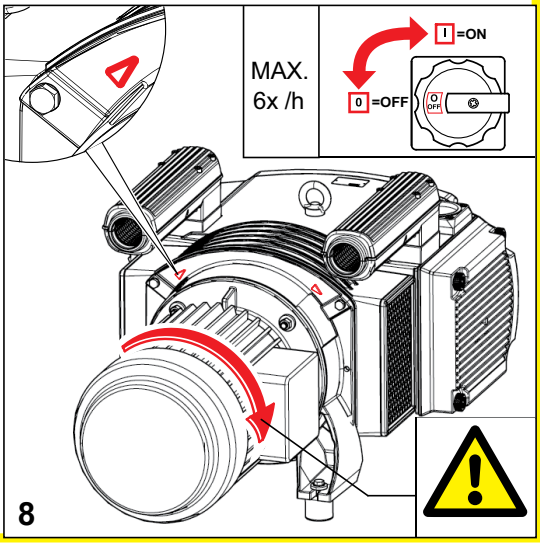
MAX.
6x /h
I =ON
0 =OFF
8

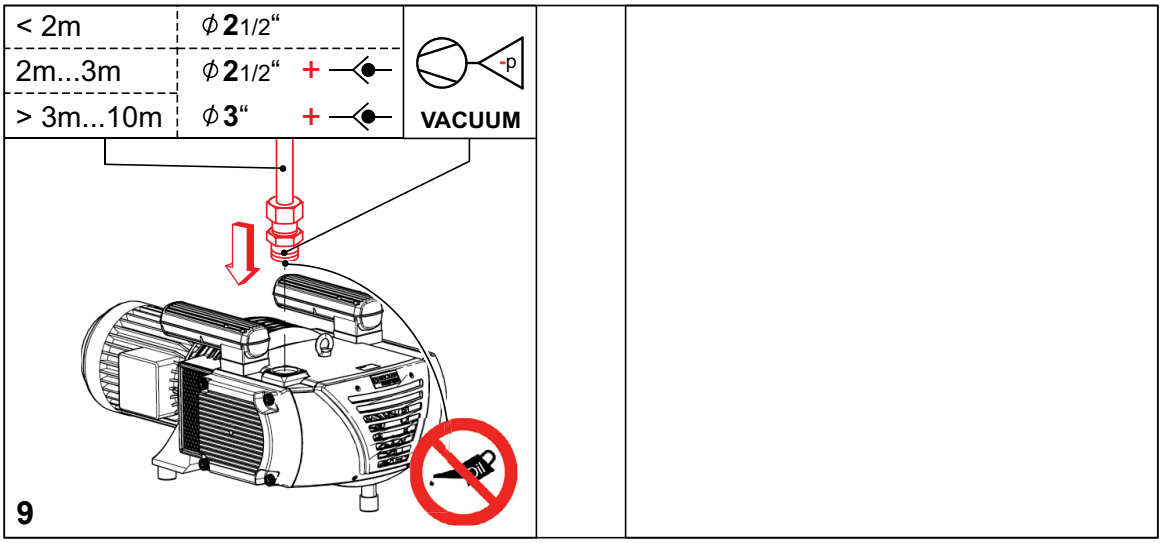
< 2m
ϕ 2 1/2“
2m...3m
ϕ 2 1/2“ +
> 3m...10m
ϕ 3“ +
-p
VACUUM
9

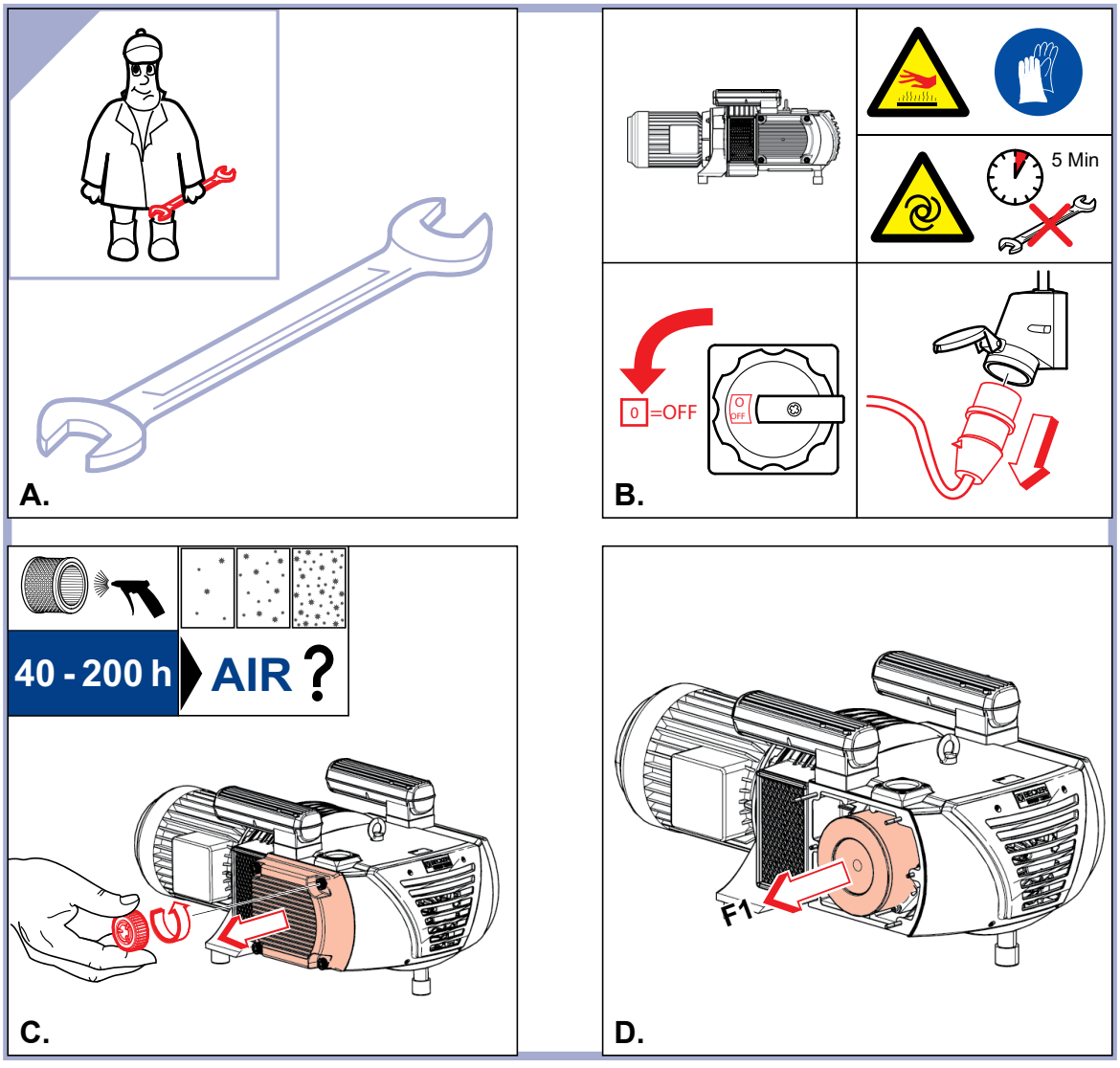
A.
5 Min
0 =OFF
B.
40 - 200 h
AIR ?
C.
F1
D.

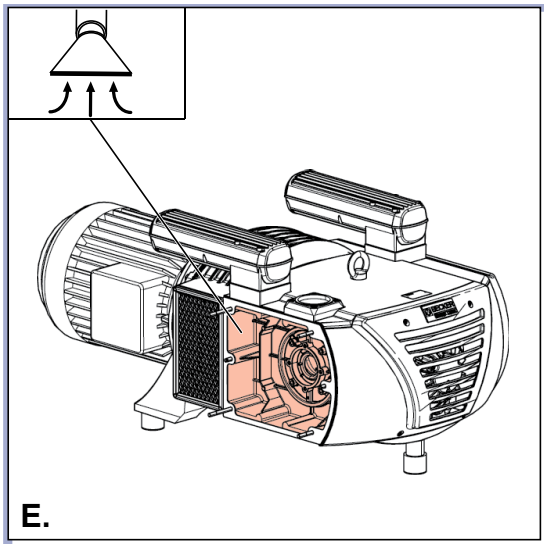

E.

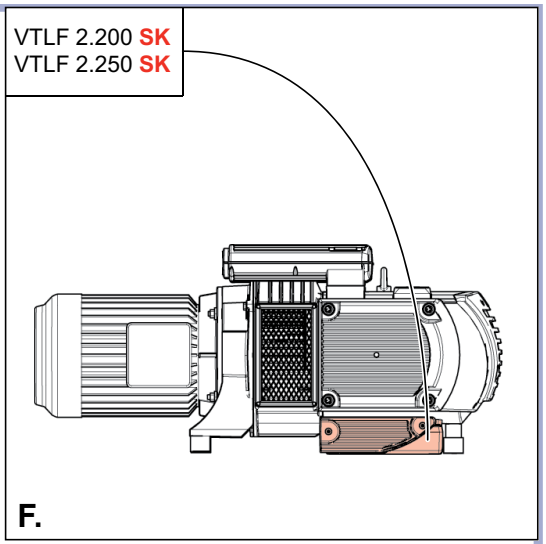

F.

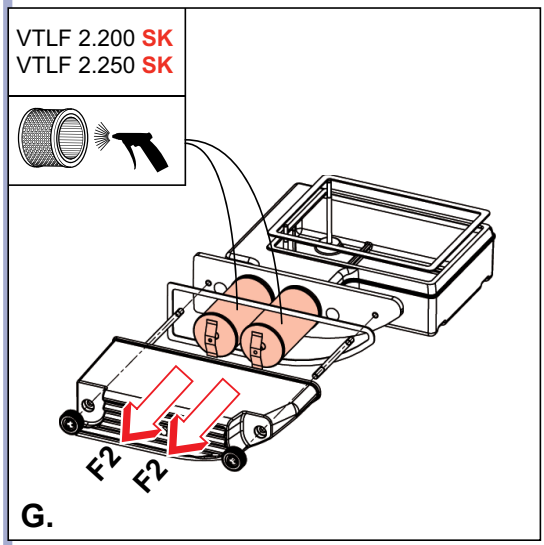

G.

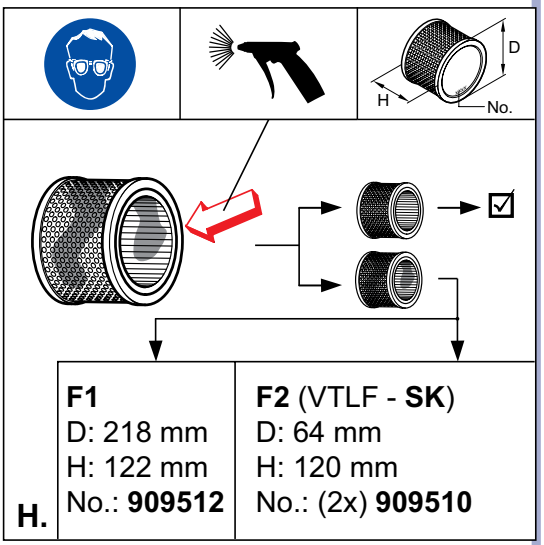

H.

F1	F2 (VTLF - **SK**)
D: 218 mm	D: 64 mm
H: 122 mm	H: 120 mm
No.: **909512**	No.: (2x) **909510**

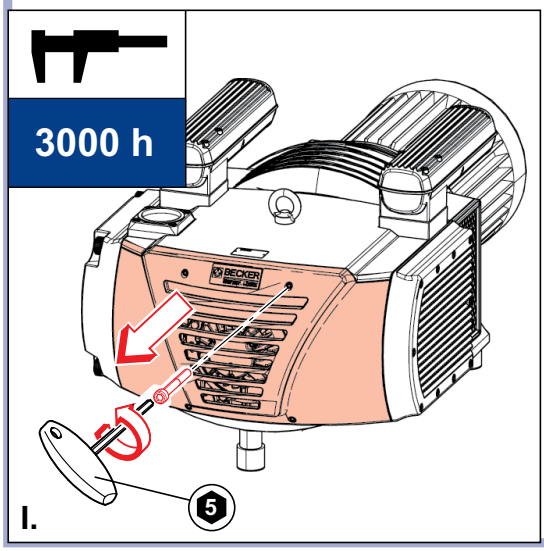

I.

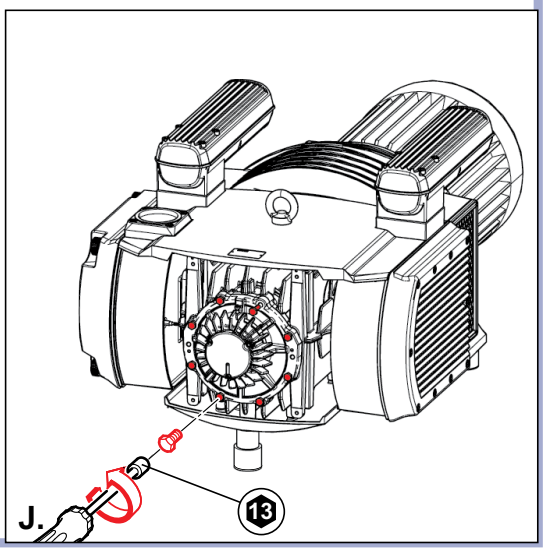

J.

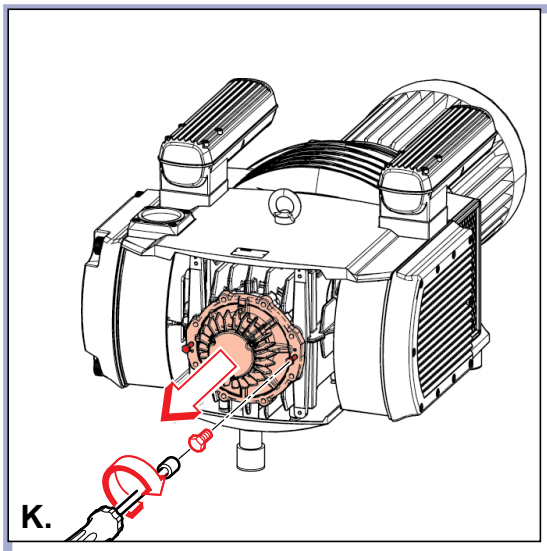
K.

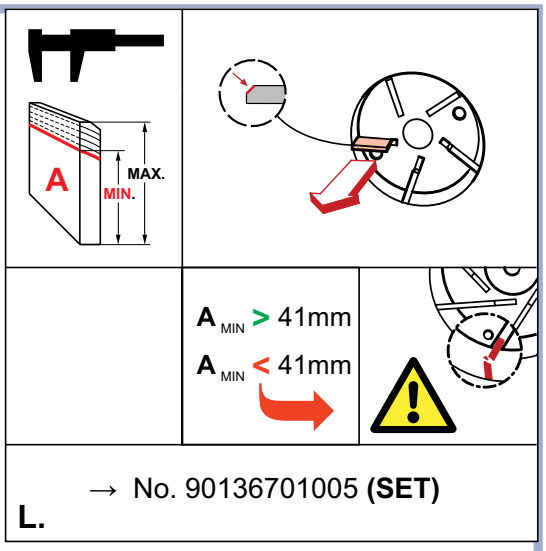

→ No. 90136701005 **(SET)**
L.

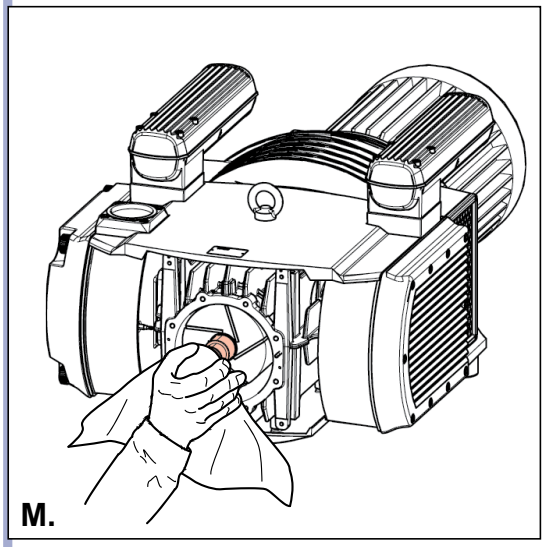
M.

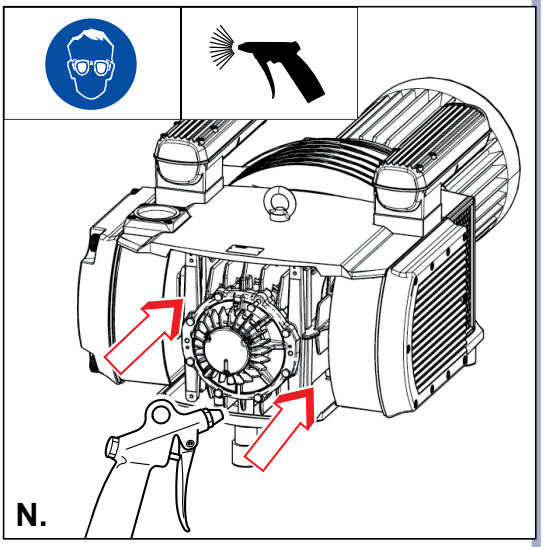
N.

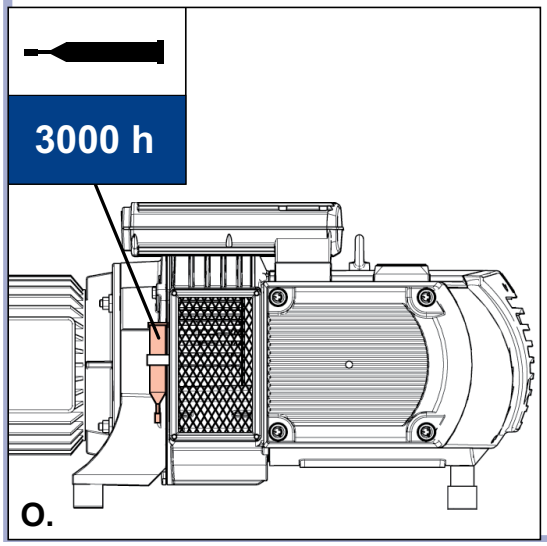

O.

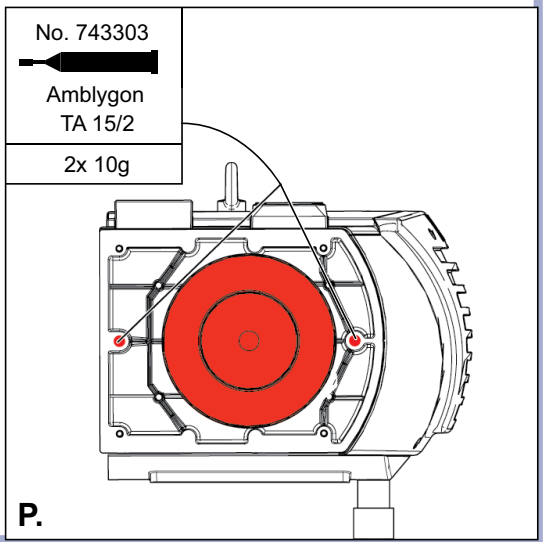

P.

TLF 2.250-2.500
Internal Filter Inspection

-Tools required-

Flashlight

ATTENTION

VISUAL CLUES REGARDING VTLF 2.250 FILTER MAINTENANCE SHOULD NOT ALWAYS BE THE SOLE INDICATOR OF WHETHER A FILTER IS "CLEAN".

THOUGH THE FILTER HAS TREMENDOUS SURFACE AREA, THE DEEP PLEATING OF THE FILTER MAY DISGUISE WHETHER THE FILTER IS CLOGGED.

A PERIODIC PHYSICAL INSPECTION SHOULD BE PERFORMED TO MAKE SURE THERE IS A GOOD FLOW OF AIR THROUGH THE FILTER.

A CLOGGED FILTER IS ALMOST ALWAYS THE CAUSE OF PRE-MATURE VANE WEAR OR IN SOME CASES, PUMP FAILURE

-Remove the (4) black knobs by hand-

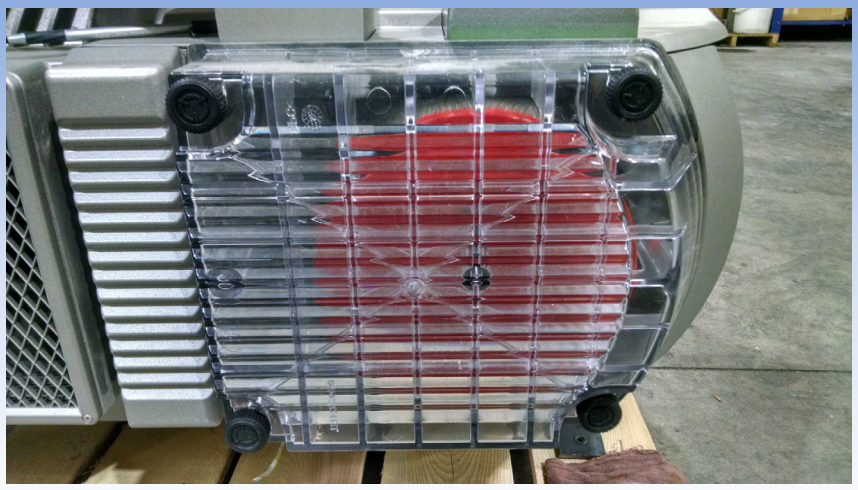

-Remove the internal filter and look for debris-

-Check for large debris deposits. This is an indicator that the filter caught the smaller particles-

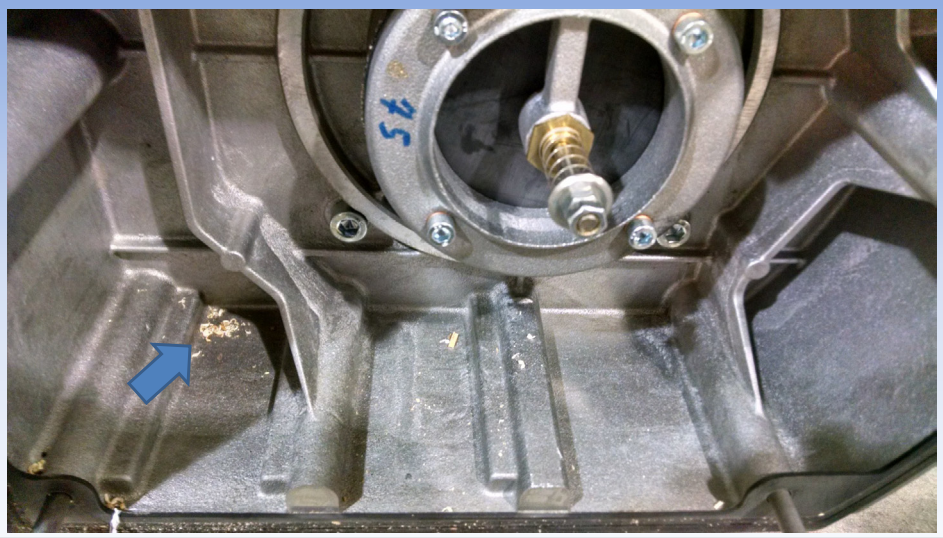

-Use a flashlight on the outside of the filter-

If light **cannot** be seen on the inside, the filter is clogged and needs replaced.

-If you **can** see light, then blow out the filter using compressed air and replace-

- This needs to be a modest amount of light.
- Light should be present through each pleat.

Greasing TLF 2.200-2.360

-Tools required-
X1 – 7433050000
(50 gram grease gun)

BECKER

Author: Mike Ruff
Becker Pumps Corp.

Greasing instructions

The greasing instructions can be found on step "P." in the operation manual sent with each pump.

Or they can be found at www.Beckerpumps.com

Bearings are to be grease every 3000 – 4000 hours

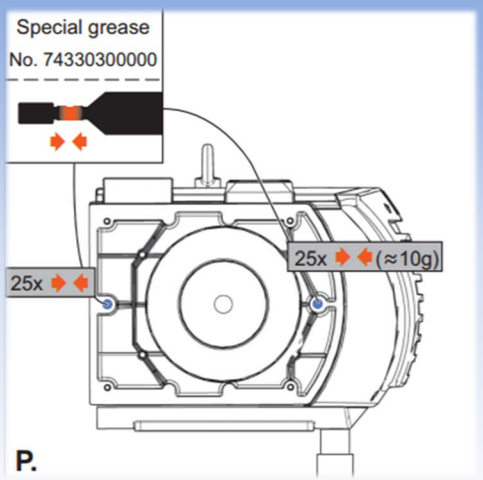

BECKER

Author: Mike Ruff
Becker Pumps Corp.

All new units come with new grease guns.

(Found in either of the two places below)

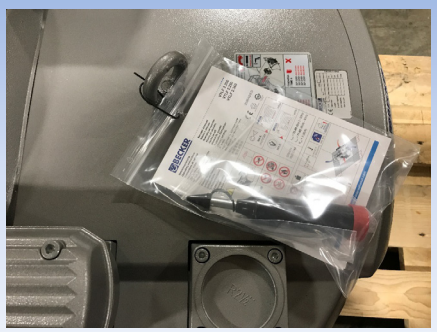

BECKER

Author: Mike Ruff
Becker Pumps Corp.

GREASING PROCEDURE

BECKER

Author: Mike Ruff
Becker Pumps Corp.

Remove the filter cover by loosening the black hand knobs.

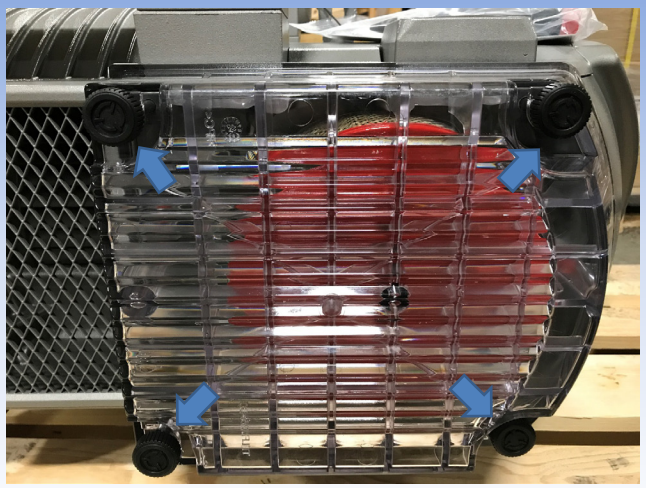

BECKER

Author: Mike Ruff
Becker Pumps Corp.

Remove the internal filter and replace if needed.

Grease fittings are found next to the filter.
(Remove the red caps.)

BECKER

Author: Mike Ruff
Becker Pumps Corp.

Remove the black cap from the grease gun

BECKER

Author: Mike Ruff
Becker Pumps Corp.

Prime all new grease guns by placing them at an angle against a hard surface.

Pump a few times until the grease is visible at the tip.

BECKER

Author: Mike Ruff
Becker Pumps Corp.

Place the grease gun against the push fitting

Pump 10x into each bearing

(New or dry bearings = 25 times per bearing)

BECKER

Author: Mike Ruff
Becker Pumps Corp.

Once the pump is ran, the grease will evenly distribute between the rollers and ball bearings.

BECKER

Author: Mike Ruff
Becker Pumps Corp.

TECHNO CNC SYSTEMS LIMITED WARRANTY & COVERAGE

Limited Warranty On Techno Brand Products

Subject to the terms and conditions set forth in this warranty document, Techno CNC Systems LLC ("Techno") warrants its Techno brand products ("Product" or "Products") to the original purchaser for a period of one (1) year against defects in material and workmanship under normal use and conditions ("Product Limited Warranty"). The Product Limited Warranty commences on the date of Product shipment from Techno facilities and expires one (1) year from the ship date ("Product Warranty Period").

Spare or replacement parts ("Part" or "Parts") for Techno Products are warranted to the original purchaser for a period of ninety (90) days against defects in material and workmanship under normal use and conditions ("Parts Limited Warranty"). A Parts Limited Warranty commences on the date of a Part shipment from Techno facilities and expires ninety (90) day from the ship date ("Parts Warranty Period").

A Product Limited Warranty may be validly transferred to one additional party by the original purchaser provided that a reregistration fee is paid to Techno within seven (7) days of transfer of the Product and prior to the expiration of the Warranty Period. Reregistration of any Product warranty does not extend the Warranty Period. A Parts Warranty is not transferable.

Product Limited Warranty and Parts Limited Warranty are hereinafter referred to collectively as "Limited Warranty." Product Warranty Period and Parts Warranty Period are hereinafter referred to collectively as "Warranty Period."

What Is Covered Under The Limited Warranty

During the Warranty Period, Products and Parts that Techno deems validly subject to a warranty claim will be repaired or replaced, in Techno's sole discretion, without charge. Repaired items may include new or refurbished replacement parts. Replaced items may be new or may be manufactured from serviceable used parts. Items that have been repaired and/or replaced will be warranted only for the unexpired portion of the applicable Warranty Period to the original purchaser.

As a condition to this Limited Warranty, customers shall have read the operator's manual and registered the Product or Part with Techno within 30 days of purchase.

What Is Not Covered Under The Limited Warranty

Events That Are Not Covered Under This Limited Warranty Include:

* Normal maintenance services as outlined in the operator's manual or other operational instructions provided by Techno (such as oil change, cleaning, lubrication and adjustments).
* Replacement of consumable items such as oil, lubricants, belts, router bits, or other items subject to normal service replacement.

* Product/Part damage resulting from third-party parts, accessories or systems connected to or used in conjunction with the Product/Part that have adversely affected its operation, performance or durability.

* Product/Part damage caused by normal wear, accidents, improper maintenance, improper use or abuse, alterations, or failure to follow operation and maintenance instructions contained in the operator's manual.

* Products/Parts purchased from any supplier, distributor or dealer not authorized by Techno.

* Labor costs including, but not limited to, such costs as the removal and reinstallation of a component or assembly.

* Insurance and packing costs for a defective items returned to Techno by the customer.

* Product/Part damage caused by electrical surges, improper venting, flooding, fire, freezing, corrosive atmospheric elements, abnormal external temperature, or any event of force majeure such as riot or act of war.

* Noise or vibration unless it is the result of defective material or workmanship of the Product/Part.

* Claims of defective Products or Parts not made in conformance with Techno's return policy as set forth below.

* Transport costs for defective items that require more than one (1) shipping to remedy a claimed defect.

* Claims for personal injuries, incidental or consequential damages, or economic loss (profit or revenue), however caused. i.e. any other incidental, consequential, indirect, special and/or punitive damages, whether based on contract, warranty, tort (including, but not limited to, strict liability or negligence), patent infringement, or otherwise, even if advised of the possibility of such damages. Some states do not allow the exclusion or limitation of certain damages, so the above exclusion or limitation may not apply to a particular customer depending on location.

* CLAIMS FOR PRODUCT COMPONENTS OR PARTS THAT ARE WARRANTED SEPARATELY BY THEIR RESPECTIVE MANUFACTURER(S) OR SUPPLIER(S). Available warranties covering those components are furnished with each Product and Part. Techno CNC Systems does not assume any warranty obligation or liability for components covered exclusively by the stated warranty of a component's respective manufacturer(s) or supplier(s).

Techno's Limited Warranty Shall Be Void In The Event Of An Occurrence Of Any Of The Following:

* Failure by the Original Purchaser to register the Product within thirty (30) days of its purchase.

* Where applicable, failure to validly reregister the Product within seven (7) days of transfer of the Product and prior to the expiration of the Warranty Period.

* Improper installation of the Product, including but not limited to, installation in violation of applicable rules, laws or building codes, and installation for non- recommended uses.

* Accident, abuse or misuse of the Product.

* Failure to follow or comply with the user's operational manual.

* Modification, alteration, addition of non-approved components, or misapplication of the Product or Part in any manner.

* Repairs and service conducted by personnel unauthorized by Techno.

* Modifications to, and tampering with, the Product or Part.

* Use of non-standard parts or accessories without prior written approval from Techno.

* Use of Product or part for purposes for which the item was not designed or intended.

* Cancellation or recall of equipment/parts payment to Techno without specific prior written authorization from Techno.

Warranty Limitations

Techno's maximum liability hereunder is limited to the original purchase price of the Product or Part.

Techno assumes no responsibility for the selection of any Product or Part for a specific application absent Techno's written approval of such application, and makes no general representations whatsoever in respect to any such selection.

THIS WARRANTY IS IN LIEU OF ALL OTHER WARRANTIES EXPRESSED OR IMPLIED. ALL OTHER WARRANTIES, INCLUDING, BUT NOT LIMITED TO, ANY WARRANTY OF MERCHANTABILITY OR FITNESS FOR A PARTICULAR PURPOSE, WHETHER EXPRESSED, IMPLIED, OR ARISING BY OPERATION OF LAW, TRADE USAGE, OR COURSE OF DEALING, ARE HEREBY DISCLAIMED. THERE ARE NO WARRANTIES THAT EXTEND BEYOND THE DESCRIPTION ON THE FACE OF THISE WARRANTY DOCUMENT.

TECHNO SHALL NOT BE LIABLE FOR INDIRECT, INCIDENTAL, SPECIAL, CONSEQUENTIAL, PUNITIVE OR OTHER SIMILAR DAMAGES THAT MAY ARISE, INCLUDING LOST PROFITS, DAMAGE TO PROPERTY OR INJURIES TO A PERSON, LOSS OF USE, INCONVENIENCE, OR LIABILITY ARISING FROM THE INSTALLATION, SERVICE OR USE OF THE PRODUCT OR PART.

UPON THE EXPIRATION OF THE LIMITED WARRANTY PERIOD, TECHNO'S LIABILITY UNDER THIS WARRANTY SHALL TERMINATE.

Some states do not allow the contractual exclusion or limitation of incidental or consequential damages or personal injury, so the limitations set forth herein may not apply to all customers in all locations.

How To Obtain Warranty Repair/Replacement

All defective items covered under the Limited Warranty must be properly returned to Techno for inspection. Techno reserves the right to not accept returns unless the returned item is accompanied by proof of original purchase, a return authorization number ("RAN") from Techno, and shipped in accordance with packaging and shipping instructions given to the customer by Techno. Claims and requests for a RAN must be made within seven (7) days of discovery of a defect. Proper packaging and insurance for transportation is solely the customer's responsibility. All returned items must be sent to the Techno facility located in Ronkonkoma, New York (or such other place as Techno specifically designates to the customer) with a statement of the problem and transportation prepaid. If, upon examination, Techno determines that a warranted defect exists, the returned item will be repaired or replaced in Techno's sole discretion at no charge, and shipped prepaid back to the customer. Return shipment will be by common carrier of Techno's choosing. If rapid delivery is requested by customer, then such transport expense shall be borne by the customer.

Warranty inspections and repairs are performed at Techno's New York facility, where all necessary diagnostic and repair equipment is available. This equipment is difficult to transport and field service is accordingly severely limited and will only be supplied at Techno's sole discretion. If field service is required, all service call expenses, including transportation, travel time, subsistence costs, and the prevailing cost per hour (eight hour minimum) are the responsibility of the customer.

In the event that support diagnostics of a covered Product or Part requires an item to be shipped more than one (1) time for any given claimed warranty defect, then the customer shall bear all transport costs.

If an out-of-warranty situation exists, the customer will be notified of the repair or replacement cost. At such time, the customer must issue a purchase order to cover the cost of the repair/replacement or authorize the item to be shipped back to the customer at the customer's expense. In all cases, a restocking charge of twenty (20%) percent will be charged to the customer on all items returned to stock.

Warranty claims will not be reviewed or remedied unless the warranty registration is received by Techno within thirty (30) days of the purchase date. All warranty issues must be handled through Techno.

Techno customer service can be reached by calling 631-648-7481.

Additional Terms & Conditions

TECHNO RESERVES THE RIGHT TO CHANGE DESIGNS, SPECIFICATIONS, PRICES AND ANY APPLICABLE DOCUMENTATION WITHOUT NOTICE TO THE CUSTOMER.

Techno is not liable for delay or failure to perform any obligation hereunder by reason of circumstances beyond Techno's reasonable control. These circumstances include, but
are not limited to, accidents, acts of God, strikes or labor disputes, laws, rules, or regulations of any government or government agency, fires, floods, delays or failures in delivery of carriers or suppliers, shortages of materials, and any other event beyond Techno's control.

No legal action arising out of any claimed breach of this Limited Warranty may be brought by the more than one (1) year following date of purchase of a Product or Part. This Agreement shall be governed in all respects by the laws of the State of New York, United States of America. Any legal action brought by a customer against Techno must be brought in the state courts of the State of New York, Second Judicial Department. Some states do not allow the contractual limitation of time periods for bringing suit so the limitations set forth herein may not apply to all customers in all locations.

Once an order is placed by the purchaser, in no event shall purchaser cancel payment or any portion thereof (e.g. reverse charges on a credit card or stop payment on a check) without prior express written authorization from Techno. Failure to obtain prior express written authorization from Techno shall be an event voiding Techno's Limited Warranty on the Product or Part and purchaser shall be subject to liability for any damages sustained by Techno.

The terms and conditions contained herein shall constitute the entire agreement concerning the Limited Warranty described herein. No oral or other representations are in effect. No dealer, distributor, or individual is authorized to amend, modify, or extend this Limited Warranty in any manner and only the warranty expressed in this warranty document is extended herein by Techno. Statements made outside this warranty document, such as in dealer advertising or presentations, whether oral or written, do not constitute warranties by Techno and should not be relied upon.

Section headings contained in this warranty document are for informational purposes only and may not be used to limit the terms and conditions set forth in this warranty document. If any portion or provision contained in this Limited Warranty & Coverage shall to any extent be found to be invalid or unenforceable, the remainder of this coverage or the application of such portion or provision in circumstances other than those in which it is held invalid or unenforceable, shall not be affected thereby, and each remaining portion or portion of this Limited Warranty shall be valid and enforceable.